TWM 1000 Handbook

Signal converter for electromagnetic flowmeters

Electronic Revision:
ER 2.1.xx
(SW.REV. 3.0x)

The documentation is only complete when used in combination with the relevant documentation for the sensor.

Honeywell

Notices and Trademarks

Copyright 2010 by Honeywell

WARRANTY/REMEDY
Honeywell warrants goods of its manufacture as being free of defective materials and faulty workmanship. Contact your local sales office for warranty information. If warranted goods are returned to Honeywell during the period of coverage, Honeywell will repair or replace without charge those items it finds defective. The foregoing is Buyer's sole remedy and is in lieu of all other warranties, expressed or implied, including those of merchantability and fitness for a particular purpose. Specifications may change without notice. The information we supply is believed to be accurate and reliable as of this printing. However, we assume no responsibility for its use.
While we provide application assistance personally, through our literature and the Honeywell web site, it is up to the customer to determine the suitability of the product in the application.

Honeywell Field Solutions
512 Virginia Drive
Fort Washington, PA 19034

Abstract

This document provides descriptions and procedures for the Installation, Configuration, Operation, and Troubleshooting of your device.

Contacts

World Wide Web:
The following lists Honeywell's World Wide Web sites that will be of interest to our customers.

Honeywell Organization	WWW Address (URL)
Corporate	http://www.honeywell.com
Field Solutions	http://www.honeywell.com/ps
Technical tips	http://content.honeywell.com/ipc/faq

Telephone:
Contact us by telephone at the numbers listed below.

Organization		Phone Number
United States and Canada	Honeywell	**Tech. Support:** 1-800-423-9883 **Service:** 1-800-525-7439

1 Safety instructions 9

1.1 Software history 9
1.2 Intended use 10
1.3 Certifications 10
1.4 Safety instructions from the manufacturer 11
1.4.1 Copyright and data protection 11
1.4.2 Disclaimer 11
1.4.3 Product liability and warranty 12
1.4.4 Information concerning the documentation 12
1.4.5 Warnings and symbols used 13
1.5 Safety instructions for the operator 13

2 Device description 15

2.1 Scope of delivery 15
2.2 Device description 16
2.3 Nameplates 17
2.3.1 Nameplate (example) 17

3 Installation 19

3.1 Notes on installation 19
3.2 Storage 19
3.3 Transport 19
3.4 Installation specifications 19
3.5 Mounting of the compact version 20
3.6 Mounting the wall-mounted housing, remote version 20
3.6.1 Wall mounting 20

4 Electrical connections 23

4.1 Safety instructions 23
4.2 Important notes on electrical connection 23
4.3 Electrical cables for remote device versions, notes 24
4.3.1 Notes on signal cable A 24
4.3.2 Notes on field current cable C 24
4.3.3 Requirements for signal cables provided by the customer 25
4.4 Preparing the signal and field current cables 26
4.4.1 Signal cable A (type DS 300), construction 26
4.4.2 Preparing signal cable A, connection to signal converter 27
4.4.3 Length of signal cable A 28
4.4.4 Preparing field current cable C, connection to signal converter 29
4.4.5 Preparing signal cable A, connection to measuring sensor 31
4.4.6 Preparing field current cable C, connection to measuring sensor 32
4.5 Connecting the signal and field current cables 33
4.5.1 Connecting the signal and field current cables to the signal converter, remote version 34
4.5.2 Connection diagram for signal and field current cable 36
4.6 Grounding the measuring sensor 37
4.6.1 Classical method 37

4.7 Connecting the power ... 38
4.8 Overview of outputs ... 40
4.8.1 Description of the CG number ... 40
4.8.2 Fixed, non-alterable output versions ... 40
4.9 Description of the outputs ... 41
4.9.1 Current output ... 41
4.9.2 Pulse and frequency output ... 42
4.9.3 Status output and limit switch ... 43
4.10 Electrical connection of the outputs ... 44
4.10.1 Electrical connection of the outputs ... 44
4.10.2 Laying electrical cables correctly ... 45
4.11 Connection diagrams of outputs ... 45
4.11.1 Important notes ... 45
4.11.2 Description of the electrical symbols ... 46
4.11.3 Basic outputs ... 47
4.11.4 HART® connection ... 50

5 Start-up 51

5.1 Switching on the power ... 51
5.2 Starting the signal converter ... 51

6 Operation 53

6.1 Display and operating elements ... 53
6.1.1 Display in measuring mode with 2 or 3 measured values ... 54
6.1.2 Display for selection of sub-menu and functions, 3 lines ... 54
6.1.3 Display when setting parameters, 4 lines ... 55
6.1.4 Display when changing parameters, 4 lines ... 55
6.2 Menu structure ... 56
6.3 Function tables ... 58
6.3.1 Menu A, quick setup ... 58
6.3.2 Menu B, test ... 60
6.3.3 Menu C, setup ... 62
6.3.4 Set free units ... 75
6.4 Description of functions ... 76
6.4.1 Reset counter in quick setup menu ... 76
6.4.2 Deleting error messages in the quick setup menu ... 76
6.5 Status messages and diagnostic information ... 77

7 Service 81

7.1 Spare parts availability ... 81
7.2 Availability of services ... 81
7.3 Returning the device to the manufacturer ... 81
7.3.1 General information ... 81
7.3.2 Form (for copying) to accompany a returned device ... 82
7.4 Disposal ... 82

8 Technical data 83

8.1 Measuring principle ... 83
8.2 Technical data ... 84
8.3 Dimensions and weights ... 90
8.3.1 Housing ... 90
8.3.2 Mounting plate, wall-mounted version ... 93
8.4 Flow tables ... 94
8.5 Measuring accuracy ... 96

9 Description of HART interface 97

9.1 General description ... 97
9.2 Connection variants ... 97
9.2.1 Point-to-Point connection - analogue / digital mode ... 98
9.2.2 Multi-Drop connection (2-wire connection) ... 99
9.2.3 Multi-Drop connection (3-wire connection) ... 100
9.3 Outputs and HART® Dynamic variable and device variable ... 101
9.4 Parameter for the basic configuration ... 102
9.5 Field Communicator 375/475 (FC 375/475) ... 103
9.5.1 Installation ... 103
9.5.2 Operation ... 103
9.5.3 Parameter for the basic configuration ... 103
9.6 Asset Management Solutions (AMS) ... 104
9.6.1 Installation ... 104
9.6.2 Operation ... 104
9.6.3 Parameter for the basic configuration ... 104
9.7 Field Device Manager (FDM) ... 105
9.7.1 Installation ... 105
9.7.2 Operation ... 105
9.8 Process Device Manager (PDM) ... 105
9.8.1 Installation ... 105
9.8.2 Operation ... 106
9.8.3 Parameter for the basic configuration ... 106
9.9 Field Device Tool / Device Type Manager (FDT / DTM) ... 107
9.9.1 Installation ... 107
9.9.2 Operation ... 107
9.10 Appendix A: HART® menu tree for Basic-DD ... 107
9.10.1 Overview Basic-DD menu tree (positions in menu tree) ... 108
9.10.2 Basic-DD menu tree (details for settings) ... 109
9.11 Appendix B: HART® menu tree for AMS ... 112
9.11.1 Overview AMS menu tree (positions in menu tree) ... 112
9.11.2 AMS menu tree (details for settings) ... 113
9.12 Appendix C: HART® menu tree for PDM ... 117
9.12.1 Overview PDM menu tree (positions in menu tree) ... 117
9.12.2 PDM menu tree (details for settings) ... 119

1.1 Software history

The "Electronic Revision" (ER) is consulted to document the revision status of electronic equipment according to NE 53 for all GDC devices. It is easy to see from the ER whether troubleshooting or larger changes in the electronic equipment have taken place and how that has affected the compatibility.

Changes and effect on compatibility

1	Downwards compatible changes and fault repair with no effect on operation (e.g. spelling mistakes on display)	
2-_	Downwards compatible hardware and/or software change of interfaces:	
	H	HART®
	P	PROFIBUS
	F	Foundation Fieldbus
	M	Modbus
	X	all interfaces
3-_	Downwards compatible hardware and/or software change of inputs and outputs:	
	I	Current output
	F, P	Frequency / pulse output
	S	Status output
	C	Control input
	CI	Current input
	X	all inputs and outputs
4	Downwards compatible changes with new functions	
5	Incompatible changes, i.e. electronic equipment must be changed.	

INFORMATION!
In the table below, "x" is a placeholder for possible multi-digit alphanumeric combinations, depending on the available version.

Release date	Electronic Revision	Changes and compatibility	Documentation
2007-12-11	ER 2.0.0x (SW.REV. 2.00 (2.00))	-	-
2008-02-29	ER 2.0.1x (SW.REV. 2.00 (2.00))	1	iss.1 GLO Mar 09 US
2008-05-07	ER 2.0.2x (SW.REV. 2.00 (2.00))	1	iss.2 GLO May 10 US
2008-06-27	ER 2.0.3x (SW.REV. 2.00 (2.00))	1	iss.2 GLO May 10 US
2010-01-04	ER 2.0.4x (SW.REV. 2.00 (2.00))	1	iss.2 GLO May 10 US
2010-01-04	ER 2.1.0x (SW.REV. 2.10 (3.00))	1; 2-H	iss.2 GLO May 10 US

1.2 Intended use

The electromagnetic flowmeters are designed exclusively to measure the flow and conductivity of electrically conductive, liquid media.

DANGER!
For devices used in hazardous areas, additional safety notes apply; please refer to the Ex documentation.

WARNING!
If the device is not used according to the operating conditions (refer to chapter "Technical data"), the intended protection could be affected.

1.3 Certifications

CE marking

The device fulfils the statutory requirements of the following EC directives:

- Low Voltage Directive 2006/95/EC
- EMC Directive 2004/108/EC

as well as

- EN 61010
- EMC specification acc. to EN 61326/A1
- NAMUR recommendations NE 21 and NE 43

The manufacturer certifies successful testing of the product by applying the CE marking.

DANGER!
For devices used in hazardous areas, additional safety notes apply; please refer to the Ex documentation.

1.4 Safety instructions from the manufacturer

1.4.1 Copyright and data protection

The contents of this document have been created with great care. Nevertheless, we provide no guarantee that the contents are correct, complete or up-to-date.

The contents and works in this document are subject to copyright. Contributions from third parties are identified as such. Reproduction, processing, dissemination and any type of use beyond what is permitted under copyright requires written authorisation from the respective author and/or the manufacturer.

The manufacturer tries always to observe the copyrights of others, and to draw on works created in-house or works in the public domain.

The collection of personal data (such as names, street addresses or e-mail addresses) in the manufacturer's documents is always on a voluntary basis whenever possible. Whenever feasible, it is always possible to make use of the offerings and services without providing any personal data.

We draw your attention to the fact that data transmission over the Internet (e.g. when communicating by e-mail) may involve gaps in security. It is not possible to protect such data completely against access by third parties.

We hereby expressly prohibit the use of the contact data published as part of our duty to publish an imprint for the purpose of sending us any advertising or informational materials that we have not expressly requested.

1.4.2 Disclaimer

The manufacturer will not be liable for any damage of any kind by using its product, including, but not limited to direct, indirect, incidental, punitive and consequential damages.

This disclaimer does not apply in case the manufacturer has acted on purpose or with gross negligence. In the event any applicable law does not allow such limitations on implied warranties or the exclusion of limitation of certain damages, you may, if such law applies to you, not be subject to some or all of the above disclaimer, exclusions or limitations.

Any product purchased from the manufacturer is warranted in accordance with the relevant product documentation and our Terms and Conditions of Sale.

The manufacturer reserves the right to alter the content of its documents, including this disclaimer in any way, at any time, for any reason, without prior notification, and will not be liable in any way for possible consequences of such changes.

1.4.3 Product liability and warranty

The operator shall bear responsibility for the suitability of the device for the specific purpose. The manufacturer accepts no liability for the consequences of misuse by the operator. Improper installation and operation of the devices (systems) will cause the warranty to be void. The respective "Standard Terms and Conditions" which form the basis for the sales contract shall also apply.

1.4.4 Information concerning the documentation

To prevent any injury to the user or damage to the device it is essential that you read the information in this document and observe applicable national standards, safety requirements and accident prevention regulations.

If this document is not in your native language and if you have any problems understanding the text, we advise you to contact your local office for assistance. The manufacturer can not accept responsibility for any damage or injury caused by misunderstanding of the information in this document.

This document is provided to help you establish operating conditions, which will permit safe and efficient use of this device. Special considerations and precautions are also described in the document, which appear in the form of underneath icons.

1.4.5 Warnings and symbols used

Safety warnings are indicated by the following symbols.

DANGER!
This information refers to the immediate danger when working with electricity.

DANGER!
This warning refers to the immediate danger of burns caused by heat or hot surfaces.

DANGER!
This warning refers to the immediate danger when using this device in a hazardous atmosphere.

DANGER!
These warnings must be observed without fail. Even partial disregard of this warning can lead to serious health problems and even death. There is also the risk of seriously damaging the device or parts of the operator's plant.

WARNING!
Disregarding this safety warning, even if only in part, poses the risk of serious health problems. There is also the risk of damaging the device or parts of the operator's plant.

CAUTION!
Disregarding these instructions can result in damage to the device or to parts of the operator's plant.

INFORMATION!
These instructions contain important information for the handling of the device.

LEGAL NOTICE!
This note contains information on statutory directives and standards.

- HANDLING
  This symbol designates all instructions for actions to be carried out by the operator in the specified sequence.

➲ RESULT
This symbol refers to all important consequences of the previous actions.

1.5 Safety instructions for the operator

WARNING!
In general, devices from the manufacturer may only be installed, commissioned, operated and maintained by properly trained and authorized personnel.
This document is provided to help you establish operating conditions, which will permit safe and efficient use of this device.

2.1 Scope of delivery

INFORMATION!
Inspect the cartons carefully for damage or signs of rough handling. Report damage to the carrier and to the local office of the manufacturer.

INFORMATION!
Check the packing list to check if you received completely all that you ordered.

INFORMATION!
Look at the device nameplate to ensure that the device is delivered according to your order. Check for the correct supply voltage printed on the nameplate.

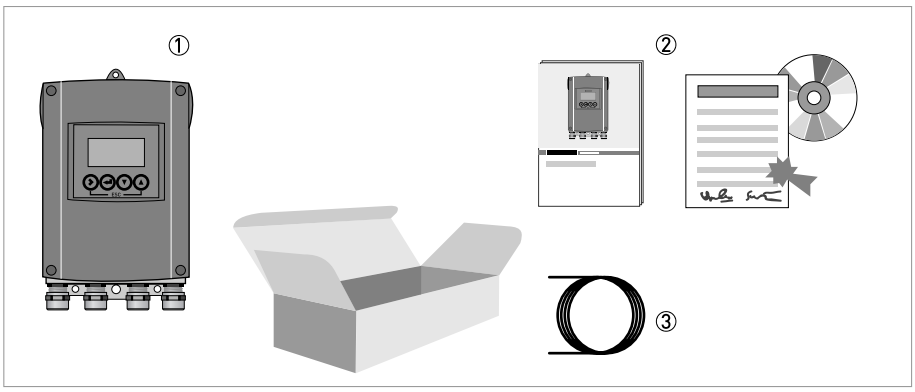

Figure 2-1: Scope of delivery

① Device in the version as ordered
② Documentation (calibration report, Quick Start, CD-ROM with product documentation for measuring sensor and signal converter)
③ Signal cable (only for remote version)

2.2 Device description

Electromagnetic flowmeters are designed exclusively to measure the flow and conductivity of electrically conductive, liquid media.

Your measuring device is supplied ready for operation. The factory settings for the operating data have been made in accordance with your order specifications.

The following versions are available:

- Compact version (the signal converter is mounted directly on the measuring sensor)
- Remote version (electrical connection to the measuring sensor via field current and signal cable)

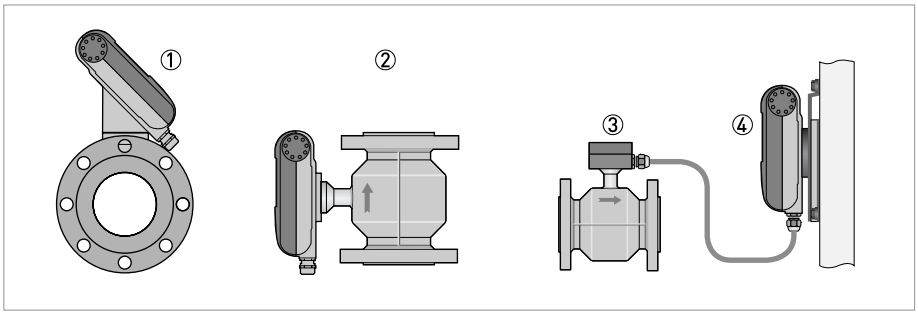

Figure 2-2: Device versions

① Compact 45° version
② Compact 0° version
③ Measuring sensor with connection box
④ Wall-mounted version

2.3 Nameplates

INFORMATION!
Look at the device nameplate to ensure that the device is delivered according to your order. Check for the correct supply voltage printed on the nameplate.

2.3.1 Nameplate (example)

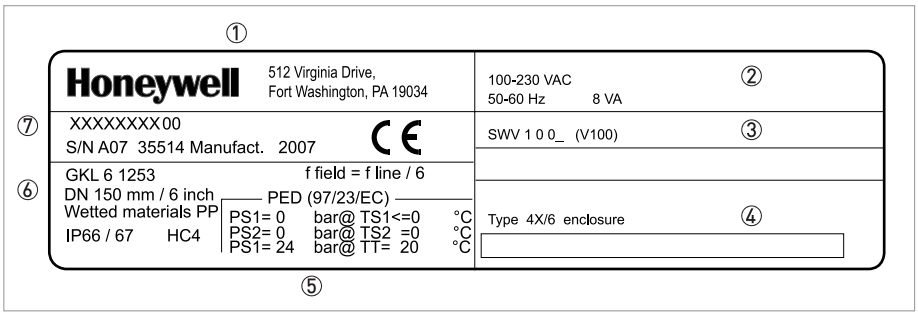

Figure 2-3: Example of a nameplate

① Manufacturer
② Power supply data
③ Software version
④ Tag name
⑤ Approvals-related pressure and temperature thresholds
⑥ GK/GKL values (measuring sensor constants); size (mm /inches); field frequency; protection category; materials of wetted parts
⑦ Product designation, serial number and manufacturing date

3.1 Notes on installation

INFORMATION!
Inspect the cartons carefully for damage or signs of rough handling. Report damage to the carrier and to the local office of the manufacturer.

INFORMATION!
Check the packing list to check if you received completely all that you ordered.

INFORMATION!
Look at the device nameplate to ensure that the device is delivered according to your order. Check for the correct supply voltage printed on the nameplate.

3.2 Storage

- Store the device in a dry, dust-free location.
- Avoid continuous direct sunlight.
- Store the device in its original packing.
- Storage temperature: -40...+70°C / -40...+158°F

3.3 Transport

Signal converter

- No special requirements.

Compact version

- Do not lift the device by the signal converter housing.
- Do not use lifting chains.
- To transport flange devices, use lifting straps. Wrap these around both process connections.

3.4 Installation specifications

INFORMATION!
The following precautions must be taken to ensure reliable installation.

- *Make sure that there is adequate space to the sides.*
- *Protect the signal converter from direct sunlight and install a sun shade if necessary.*
- *Signal converters installed in control cabinets require adequate cooling, e.g. by fan or heat exchanger.*
- *Do not expose the signal converter to intense vibration. The flowmeters are tested for a vibration level in accordance with IEC 68-2-3.*

3.5 Mounting of the compact version

INFORMATION!
The signal converter is mounted directly on the measuring sensor. For installation of the flowmeter, please observe the instructions in the supplied product documentation for the measuring sensor.

3.6 Mounting the wall-mounted housing, remote version

INFORMATION!
Assembly materials and tools are not part of the delivery. Use the assembly materials and tools in compliance with the applicable occupational health and safety directives.

3.6.1 Wall mounting

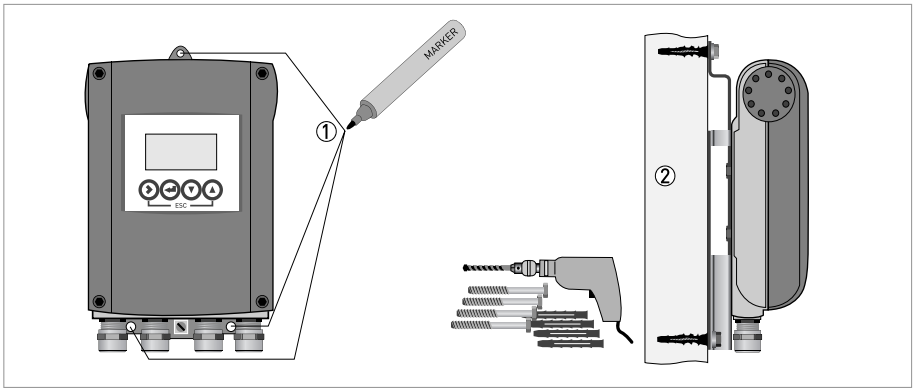

Figure 3-1: Mounting the wall-mounted housing

① Prepare the holes with the aid of the mounting plate. For further information refer to *Mounting plate, wall-mounted version* on page 93.
② Fasten the device securely to the wall with the mounting plate.

Mounting multiple devices next to each other

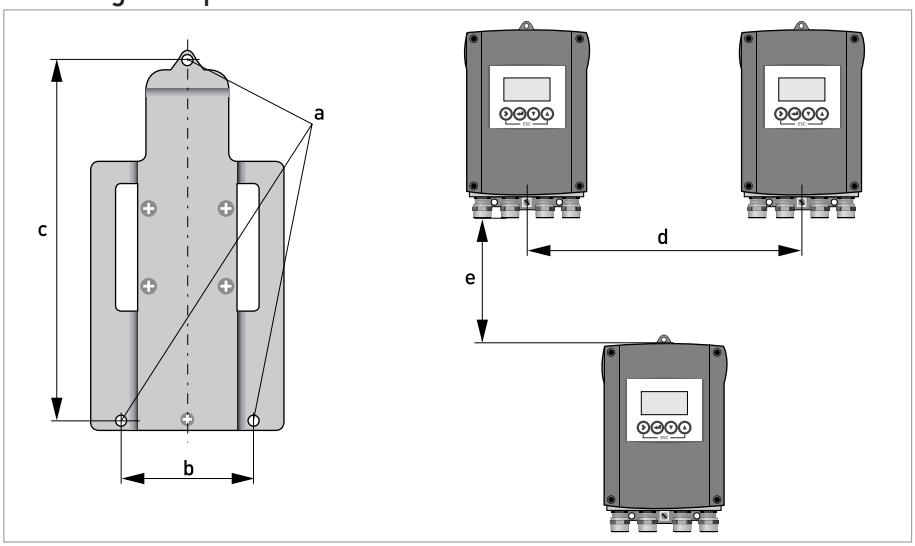

	[mm]	[inches]
a	Ø6.5	Ø0.26
b	87.2	3.4
c	241	9.5
d	310	12.2
e	257	10.1

4.1 Safety instructions

DANGER!
All work on the electrical connections may only be carried out with the power disconnected. Take note of the voltage data on the nameplate!

DANGER!
Observe the national regulations for electrical installations!

DANGER!
For devices used in hazardous areas, additional safety notes apply; please refer to the Ex documentation.

WARNING!
Observe without fail the local occupational health and safety regulations. Any work done on the electrical components of the measuring device may only be carried out by properly trained specialists.

INFORMATION!
Look at the device nameplate to ensure that the device is delivered according to your order. Check for the correct supply voltage printed on the nameplate.

4.2 Important notes on electrical connection

DANGER!
Electrical connection is carried out in conformity with the VDE 0100 directive "Regulations for electrical power installations with line voltages up to 1000 V" or equivalent national regulations.

CAUTION!
- *Use suitable cable entries for the various electrical cables.*
- *The sensor and converter are configured together in the factory. For this reason, please connect the devices in pairs. Ensure that the sensor constant GK/GKL (see type plates) are identically set.*
- *If delivered separately or when installing devices that were not configured together, set the converter to the DN size and GK/GKL of the sensor, refer to Function tables on page 58.*

4.3 Electrical cables for remote device versions, notes

4.3.1 Notes on signal cable A

INFORMATION!
Signal cable A (type DS 300) with double shielding ensures proper transmission of measured values.

Observe the following notes:

- Lay the signal cable with fastening elements.
- It is permissible to lay the signal cable in water or in the ground.
- The insulating material is flame-retardant to EN 50625-2-1, IEC 60322-1.
- The signal cable does not contain any halogens and is unplasticized, and remains flexible at low temperatures.
- The connection of the inner shield is carried out via the stranded drain wire (1).
- The connection of the outer shield (60) is carried out via the stranded drain wire (6).

4.3.2 Notes on field current cable C

DANGER!
*A shielded two-wire copper cable is used as the field current cable. The shielding **MUST** be connected in the housing of the measuring sensor and signal converter.*

INFORMATION!
The field current cable is not part of the scope of delivery.

4.3.3 Requirements for signal cables provided by the customer

INFORMATION!
If the signal cable was not ordered, it is to be provided by the customer. The following requirements regarding the electrical values of the signal cable must be observed:

Electrical safety

- To EN 60811 (Low Voltage Directive) or equivalent national regulations.

Capacitance of the insulated conductors

- Insulated conductor / insulated conductor < 50 pF/m
- Insulated conductor / shield < 150 pF/m

Insulation resistance

- R_{iso} > 100 GΩ x km
- U_{max} < 24 V
- I_{max} < 100 mA

Test voltages

- Insulated conductor / inner shield 500 V
- Insulated conductor / insulated conductor 1000 V
- Insulated conductor / outer shield 1000 V

Twisting of the insulated conductors

- At least 10 twists per meter, important for screening magnetic fields.

4.4 Preparing the signal and field current cables

INFORMATION!
Assembly materials and tools are not part of the delivery. Use the assembly materials and tools in compliance with the applicable occupational health and safety directives.

4.4.1 Signal cable A (type DS 300), construction

- Signal cable A is a double-shielded cable for signal transmission between the measuring sensor and signal converter.
- Bending radius: ≥ 50 mm / 2"

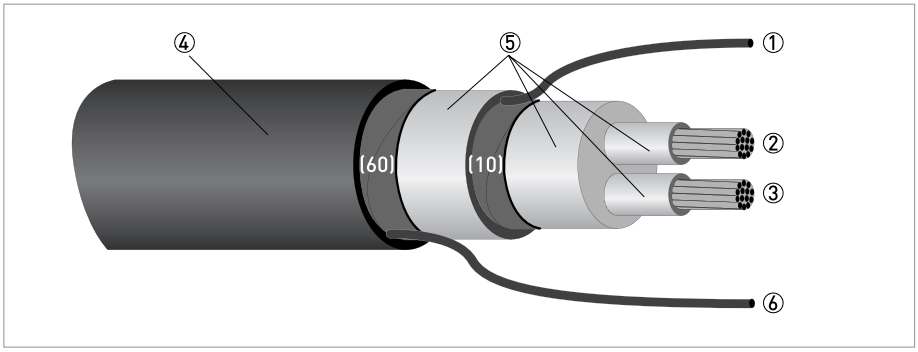

Figure 4-1: Construction of signal cable A

① Stranded drain wire (1) for the inner shield (10), 1.0 mm^2 Cu / AWG 17 (not insulated, bare)
② Insulated wire (2), 0.5 mm^2 Cu / AWG 20
③ Insulated wire (3), 0.5 mm^2 Cu / AWG 20
④ Outer sheath
⑤ Insulation layers
⑥ Stranded drain wire (6) for the outer shield (60)

4.4.2 Preparing signal cable A, connection to signal converter

INFORMATION!
Assembly materials and tools are not part of the delivery. Use the assembly materials and tools in compliance with the applicable occupational health and safety directives.

- Connection of the two shields in the signal converter is carried out via the stranded drain wires.
- Bending radius: ≥ 50 mm / 2"

Required materials

- PVC insulating tube, Ø2.5 mm / 0.1"
- Heat-shrinkable tubing
- 2x wire end ferrules to DIN 46 228: E 1.5-8 for the stranded drain wires (1, 6)
- 2x wire end ferrules to DIN 46 228: E 0.5-8 for the insulated conductors (2, 3)

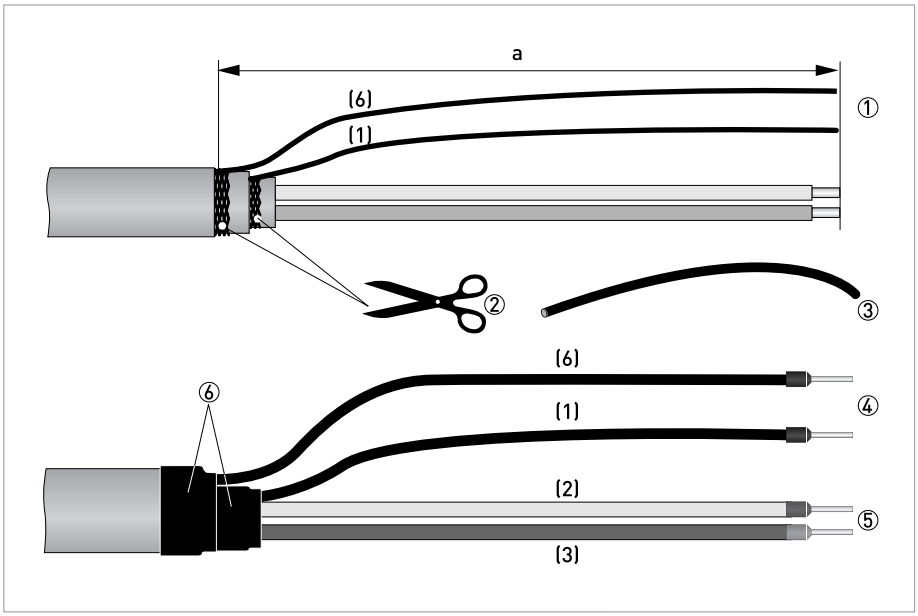

Figure 4-2: Preparation of signal cable A

a = 80 mm / 3.15"

① Strip the conductor to dimension a.
② Cut off the inner shield (10) and the outer shield (60). Make sure not to damage the stranded drain wires (1, 6).
③ Slide the insulation tubing over the stranded drain wires (1, 6).
④ Crimp the wire end ferrules onto the stranded drain wire.
⑤ Crimp the wire end ferrules onto the conductors (2, 3).
⑥ Pull the heat-shrinkable tubing over the prepared signal cable.

4.4.3 Length of signal cable A

INFORMATION!
For temperatures of the medium above 150° C / 300° F, a special signal cable and a ZD intermediate socket are necessary. These are available including the changed electrical connection diagrams.

Measuring sensor	Nominal size		Min. electrical conductivity [µS/cm]	Curve for signal cable A
	DN [mm]	[inches]		
VersaFlow Mag 100 F	10...150	3/8...6	5	A1
VersaFlow Mag 1000 F	25...150	1...6	20	A1
	200...1200	8...48	20	A2
VersaFlow Mag 4000 F	2.5...150	1/10...6	1	A1
	200...1200	8...48	1	A2
VersaFlow Mag 2000 F	2.5...100	1/10...4	1	A1
	150...250	6...10	1	A2
VersaFlow Mag 3000 F	2.5...150	1/10...6	1	A1

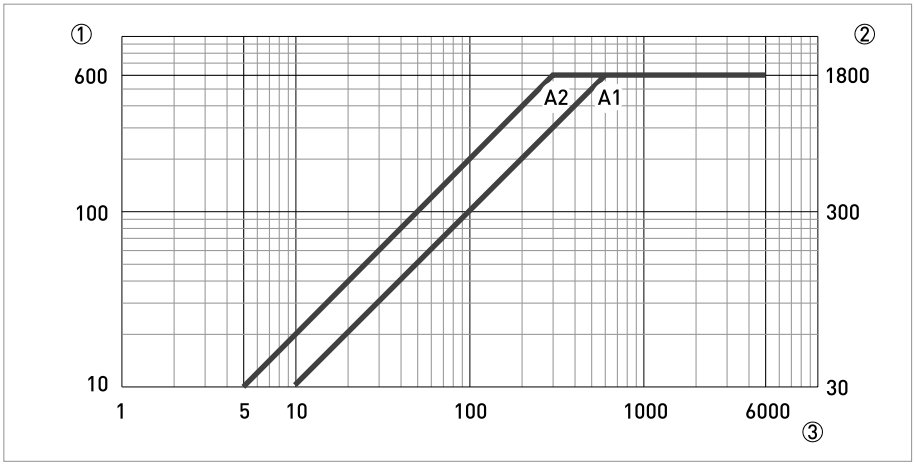

Figure 4-3: Maximum length of signal cable A

① Maximum length of signal cable A between the measuring sensor and signal converter [m]
② Maximum length of signal cable A between the measuring sensor and signal converter [ft]
③ Electrical conductivity of the medium being measured [µS/cm]

4.4.4 Preparing field current cable C, connection to signal converter

DANGER!
*A shielded two-wire copper cable is used as the field current cable. The shielding **MUST** be connected in the housing of the measuring sensor and signal converter.*

INFORMATION!
Assembly materials and tools are not part of the delivery. Use the assembly materials and tools in compliance with the applicable occupational health and safety directives.

- Field current cable C is not part of the scope of delivery.
- Bending radius: ≥ 50 mm / 2"

Required materials:

- Shielded, at least 2-wire copper cable with suitable heat-shrinkable tubing
- Insulating tube, size according to the cable being used
- DIN 46 228 wire end ferrules: size according to the cable being used

Length and cross-section of field current cable C

Length		Cross-section A_F (Cu)	
[m]	[ft]	[mm^2]	[AWG]
0...150	0...500	2 x 0.75 Cu ①	2 x 18
150...300	500...1000	2 x 1.50 Cu ①	2 x 14
300...600	1000...2000	2 x 2.50 Cu ①	2 x 12

① Cu = copper cross-section

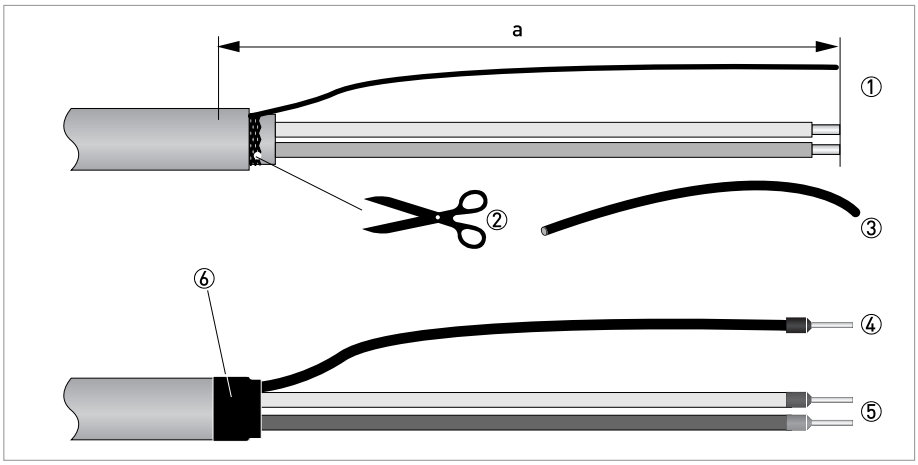

Figure 4-4: Field current cable C, preparation for the signal converter

a = 80 mm / 3.15"

① Strip the conductor to dimension a.
② If a stranded drain wire is present, remove the shield that is present. Make sure not to damage the stranded drain wire.
③ Slide an insulating tube over the stranded drain wire.
④ Crimp a wire end ferrule onto the stranded drain wire.
⑤ Crimp wire end ferrules onto the conductors.
⑥ Pull a shrinkable tube over the prepared cable.

4.4.5 Preparing signal cable A, connection to measuring sensor

INFORMATION!
Assembly materials and tools are not part of the delivery. Use the assembly materials and tools in compliance with the applicable occupational health and safety directives.

- The outer shield (60) is connected in the terminal compartment of the measuring sensor directly via the shield and a clip.
- Bending radius: ≥ 50 mm / 2"

Required materials

- PVC insulating tube, Ø2.0...2.5 mm / 0.08...0.1"
- Heat-shrinkable tubing
- Wire end ferrule to DIN 46 228: E 1.5-8 for the stranded drain wire (1)
- 2x wire end ferrules to DIN 46 228: E 0.5-8 for the insulated conductors (2, 3)

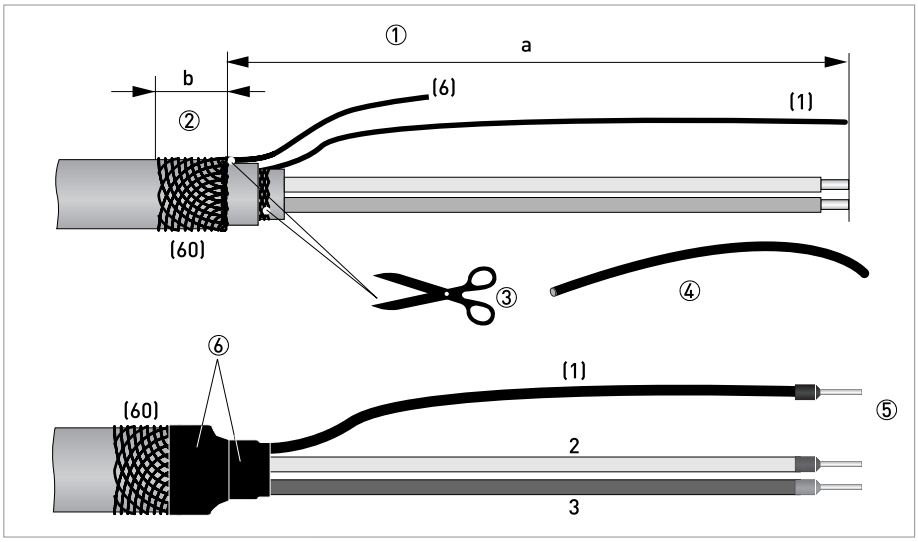

Figure 4-5: Preparing signal cable A, connection to measuring sensor

a = 50 mm / 2"
b = 10 mm / 0.39"

① Strip the conductor to dimension a.
② Trim the outer shield (60) to dimension b and pull it over the outer sheath.
③ Remove the stranded drain wire (6) of the outer shield and the inner shield (10). Make sure not to damage the stranded drain wire (1) of the inner shield.
④ Slide an insulating tube over the stranded drain wire (1).
⑤ Crimp the wire end ferrules onto conductors 2 and 3 and the stranded drain wire (1).
⑥ Pull the heat-shrinkable tubing over the prepared signal cable.

4.4.6 Preparing field current cable C, connection to measuring sensor

INFORMATION!
Assembly materials and tools are not part of the delivery. Use the assembly materials and tools in compliance with the applicable occupational health and safety directives.

- The field current cable is not part of the scope of delivery.
- The shield is connected in the terminal compartment of the measuring sensor directly via the shield and a clip.
- Bending radius: ≥ 50 mm / 2"

Required materials

- Shielded 2-wire insulated copper cable
- Insulating tube, size according to the cable being used
- Heat-shrinkable tubing
- DIN 46 228 wire end ferrules: size according to the cable being used

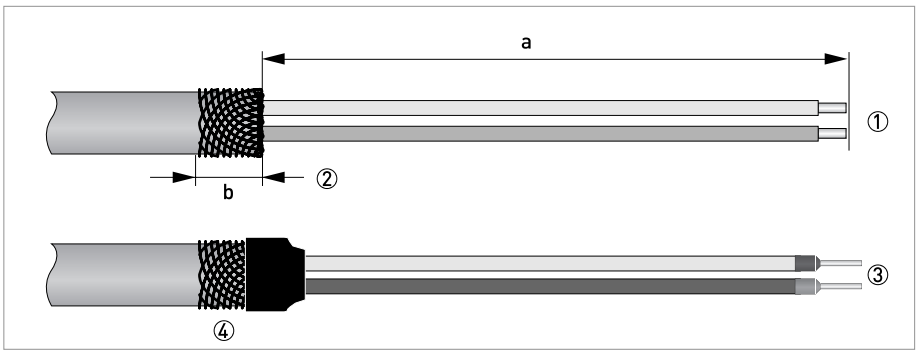

Figure 4-6: Preparation of field current cable C

a = 50 mm / 2"
b = 10 mm / 0.4"

① Strip the conductor to dimension a.
② Trim the outer shield to dimension b and pull it over the outer sheath.
③ Crimp wire end ferrules onto both conductors.
④ Pull a shrinkable tube over the prepared cable.

4.5 Connecting the signal and field current cables

DANGER!
Cables may only be connected when the power is switched off.

DANGER!
The device must be grounded in accordance with regulations in order to protect personnel against electric shocks.

DANGER!
For devices used in hazardous areas, additional safety notes apply; please refer to the Ex documentation.

WARNING!
Observe without fail the local occupational health and safety regulations. Any work done on the electrical components of the measuring device may only be carried out by properly trained specialists.

4.5.1 Connecting the signal and field current cables to the signal converter, remote version

INFORMATION!
The compact version is supplied preassembled from the factory.

Open housing

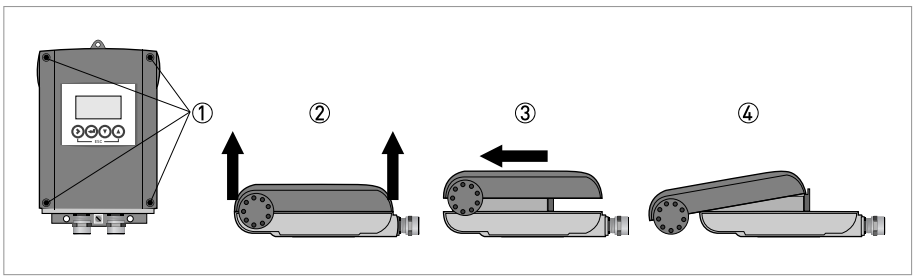

Figure 4-7: Open housing

① Loosen the 4 screws with a suitable tool.
② Lift the housing at the top and bottom at the same time.
③ Slide the housing cover upward.
④ The housing cover is guided and held by the inside hinge.

Connecting the signal and field current cables

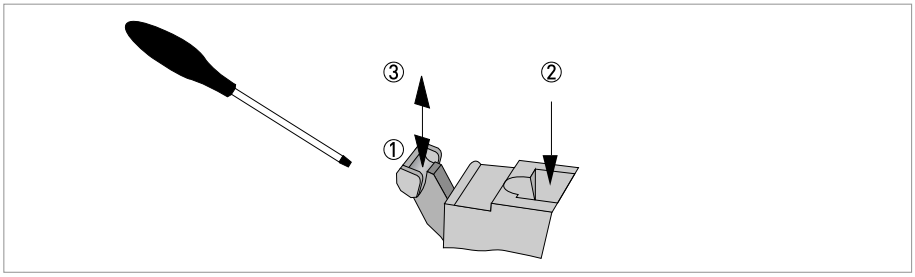

Figure 4-8: Function of the electrical connection terminal

Connect the electrical conductors as follows:

① Push the lever downwards with a screwdriver in good condition (blade: 3.5 mm wide and 0.5 mm thick).
② Insert the electrical conductor into the plug.
③ The conductor will be clamped as soon as the lever is released.

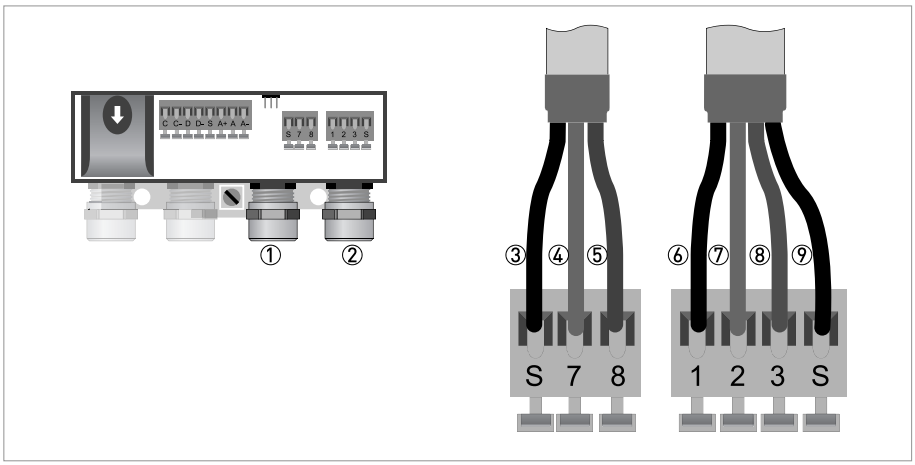

Figure 4-9: Connecting the signal and field current cables

① Cable entry for field current cable
② Cable entry for signal cable
③ Connecting the field current cable shield
④ Electrical conductor (7)
⑤ Electrical conductor (8)
⑥ Stranded drain wire (1) of the inner shield (10) of the signal cable
⑦ Electrical conductor (2)
⑧ Electrical conductor (3)
⑨ Stranded drain wire (S) of the outer shield (60)

4.5.2 Connection diagram for signal and field current cable

DANGER!
The device must be grounded in accordance with regulations in order to protect personnel against electric shocks.

- A shielded two-wire copper cable is used as the field current cable. The shielding **MUST** be connected in the housing of the measuring sensor and signal converter.
- The outer shield (60) is connected in the terminal compartment of the measuring sensor directly via the shield and a clip.
- Bending radius of signal and field current cable: ≥ 50 mm / 2"
- The following illustration is schematic. The positions of the electrical connection terminals may vary depending on the housing version.

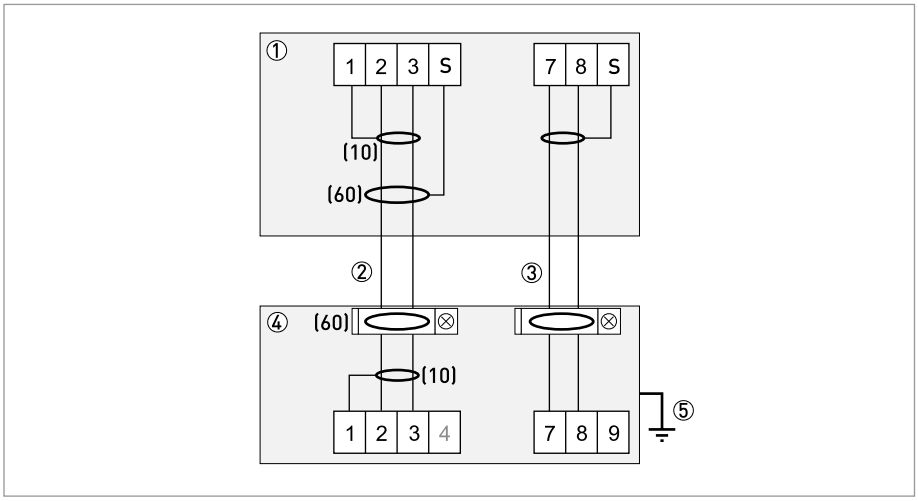

Figure 4-10: Connection diagram for signal and field current cable

① Electrical terminal compartment in signal converter
② Signal cable A
③ Field current cable C
④ Electrical terminal compartment in measuring sensor
⑤ Functional ground FE

4.6 Grounding the measuring sensor

4.6.1 Classical method

DANGER!
There should be no difference in potential between the measuring sensor and the housing or protective earth of the signal converter!

- The measuring sensor must be properly grounded.
- The grounding cable should not transmit any interference voltages.
- Do not use the grounding cable to connect more than one device to ground at the same time.
- The measuring sensors are connected to ground by means of a functional grounding conductor FE.
- Special grounding instructions for the various measuring sensors are provided in the separate documentation for the measuring sensor.
- The documentation for the measuring sensor also contain descriptions on how to use grounding rings and how to install the measuring sensor in metal or plastic pipes or in pipes which are coated on the inside.

4.7 Connecting the power

DANGER!
The device must be grounded in accordance with regulations in order to protect personnel against electric shocks.

- The housings of the devices, which are designed to protect the electronic equipment from dust and moisture, should be kept well closed at all times. Creepage distances and clearances are dimensioned to VDE 0110 and IEC 664 for pollution severity 2. Supply circuits are designed for overvoltage category III and the output circuits for overvoltage category II.
- Fuse protection ($I_N \leq 16$ A) for the infeed power circuit, and also a disconnecting device (switch, circuit breaker) to isolate the signal converter must be provided.

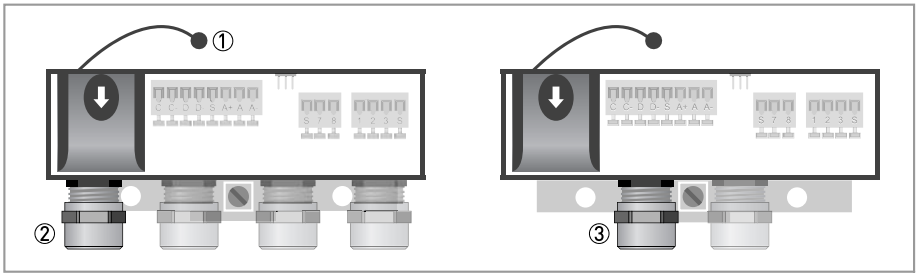

Figure 4-11: Terminal compartment for power

① Retaining band of the cover
② Cable entry power supply remote version
③ Cable entry power supply compact version

Version overview

Version	Non-Ex	Ex
100...230 VAC	Standard	Optional
12...24 VDC	Standard	-
24 VAC/DC	-	Standard

- Open the cover of the electrical terminal compartment by pressing down and pulling forwards at the same time.

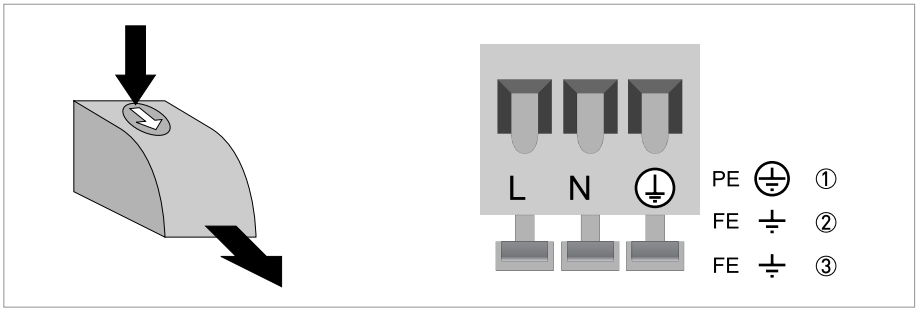

Figure 4-12: Power supply connection

① 100...230 VAC (-15% / +10%), 8 VA
② 24 VDC (-55% / +30%), 4 W
③ 24 VAC/DC (AC: -15% / +10%; DC: -25% / +30%), 7 VA and 4 W

- Close the cover after the power has been connected.

100...230 VAC (tolerance range: -15% / +10%)

- Note the power supply voltage and frequency (50...60 Hz) on the nameplate.

INFORMATION!
240 VAC + 5% is included in the tolerance range.

12...24 VDC (tolerance range: -55% / +30%)

- Note the data on the nameplate!
- When connecting to functional extra-low voltages, provide a facility for protective separation (PELV) (acc. to VDE 0100 / VDE 0106 and IEC 364 / IEC 536 or relevant national regulations).

INFORMATION!
12 VDC - 10% is included in the tolerance range.

24 VAC/DC (tolerance range: AC: -15% / +10%; DC: -25% / +30%)

- AC: Note the power supply voltage and frequency (50...60 Hz) on the nameplate.
- DC: When connecting to functional extra-low voltages, provide a facility for protective separation (PELV) (acc. to VDE 0100 / VDE 0106 and IEC 364 / IEC 536 or relevant national regulations).

INFORMATION!
*12 V is **not** included in the tolerance range.*

4.8 Overview of outputs

4.8.1 Description of the CG number

CG 1_ _ _ _ _ 0 0
① ② ③ ④ ⑤

Figure 4-13: Marking (CG number) of the electronics module and output variants

① ID number: 0
② ID number: 0 = standard; 9 = special
③ Power supply
④ Display (language versions)
⑤ Output version

4.8.2 Fixed, non-alterable output versions

This signal converter is available with various output combinations.

- The grey boxes in the tables denote unassigned or unused connection terminals.
- In the table, only the final digits of the CG-No. are depicted.
- Connection terminal A+ is only operable in the basic output version.

CG-No.	Connection terminals						
	A+	A	A-	C	C-	D	D-

Basic outputs (I/O) Standard

1 0 0		I_p + HART® passive ①	S_p passive	P_p / S_p passive ②
	I_a + HART® active ①			

① function changed by reconnecting
② changeable

Description of used abbreviations

I_a	I_p	Current output active or passive
P_p		Pulse/frequency output passive
S_p		Status output / limit switch passive

4.9 Description of the outputs

4.9.1 Current output

- All outputs are electrically isolated from each other and from all other circuits.
- All operating data and functions can be adjusted.
- Passive mode: external power $U_{ext} \leq 32$ VDC at $I \leq 22$ mA
- Active mode: load impedance $R_L \leq 750\ \Omega$ at $I \leq 22$ mA
- Self-monitoring: interruption or load impedance too high in the current output loop
- Error message possible via status output, error indication on LC display.
- Current value error detection can be adjusted.
- Automatic range conversion via threshold. The setting range for the threshold is between 5 and 80% of $Q_{100\%}$, ± 0...5% hysteresis (corresponding ratio from smaller to larger range of 1:20 to 1:1.25).
  Signaling of the active range possible via a status output (adjustable).
- Forward / reverse flow measurement (F/R mode) is possible.

INFORMATION!
For further information refer to Connection diagrams of outputs on page 45.

DANGER!
For devices used in hazardous areas, additional safety notes apply; please refer to the Ex documentation.

4.9.2 Pulse and frequency output

- All outputs are electrically isolated from each other and from all other circuits.
- All operating data and functions can be adjusted.
- Passive mode:
  External power supply required: $U_{ext} \leq 32$ VDC
  $I \leq 100$ mA at $f \leq 10$ kHz (override up to $f_{max} \leq 12$ kHz)
- Scaling:
  Frequency output: in pulses per time unit (e.g. 1000 pulses/s at $Q_{100\%}$);
  Pulse output: quantity per pulse.
- Pulse width:
  Symmetric (pulse duty factor 1:1, independent of output frequency)
  automatic (with fixed pulse width, duty factor approx. 1:1 at $Q_{100\%}$) or
  fixed (pulse width adjustable as required from 0.05 ms...2 s)
- Forward / reverse flow measurement (F/R mode) is possible.
- The pulse and frequency output can also be used as a status output / limit switch.

INFORMATION!
For further information refer to Connection diagrams of outputs on page 45.

DANGER!
For devices used in hazardous areas, additional safety notes apply; please refer to the Ex documentation.

4.9.3 Status output and limit switch

- The status outputs / limit switches are electrically isolated from each other and from all other circuits.
- The output stages of the status outputs / limit switches behave like relay contacts.
- All operating data and functions can be adjusted.
- Passive mode: external power supply required:
  $U_{ext} \leq 32$ VDC; $I \leq 100$ mA
- For information on the adjustable operating states refer to *Function tables* on page 58.

INFORMATION!
For further information refer to Connection diagrams of outputs on page 45.

DANGER!
For devices used in hazardous areas, additional safety notes apply; please refer to the Ex documentation.

4.10 Electrical connection of the outputs

INFORMATION!
Assembly materials and tools are not part of the delivery. Use the assembly materials and tools in compliance with the applicable occupational health and safety directives.

4.10.1 Electrical connection of the outputs

DANGER!
All work on the electrical connections may only be carried out with the power disconnected. Take note of the voltage data on the nameplate!

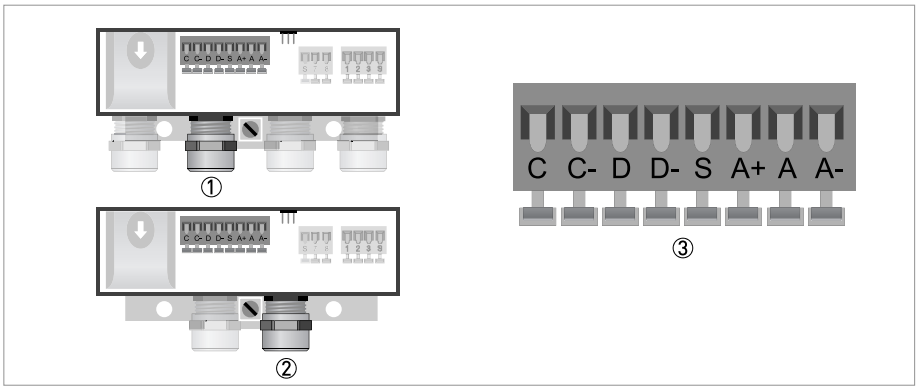

Figure 4-14: Connection of outputs

① Cable entry, remote version
② Cable entry, compact version
③ Terminal S for shield

- Open the housing cover
- Push the prepared cables through the cable entries and connect the necessary conductors.
- Connect the shield.
- Close the housing cover.

INFORMATION!
Ensure that the housing gasket is properly fitted, clean and undamaged.

4.10.2 Laying electrical cables correctly

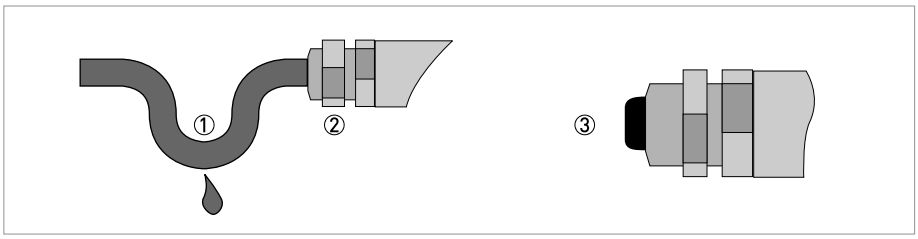

Figure 4-15: Protect housing from dust and water

① For compact versions with nearly horizontally-oriented cable entries, lay the necessary electric cables with a drip loop as shown in the illustration.
② Tighten the screw connection of the cable entry securely.
③ Seal cable entries that are not needed with a plug.

4.11 Connection diagrams of outputs

4.11.1 Important notes

- All groups are electrically isolated from each other and from all other output circuits.
- Passive operating mode: An external power supply is necessary to operate (activation) the subsequent devices (U_{ext}).
- Active operating mode: The signal converter supplies the power for operation (activation) of the subsequent devices, observe max. operating data.
- Terminals that are not used should not have any conductive connection to other electrically conductive parts.

DANGER!
For devices used in hazardous areas, additional safety notes apply; please refer to the Ex documentation.

Description of used abbreviations

I_a	I_p	Current output active or passive
P_p		Pulse/frequency output passive
S_p		Status output / limit switch passive

4.11.2 Description of the electrical symbols

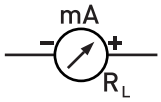	mA meter 0...20 mA or 4...20 mA and other R_L is the internal resistance of the measuring point including the cable resistance
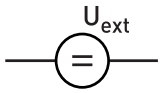	DC voltage source (U_{ext}), external power supply, any connection polarity
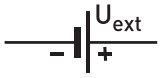	DC voltage source (U_{ext}), observe connection polarity according to connection diagrams
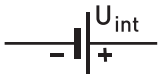	Internal DC voltage source
	Controlled internal power source in the device
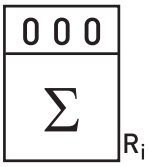	Electronic or electromagnetic counter At frequencies above 100 Hz, shielded cables must be used to connect the counters. R_i Internal resistance of the counter
	Button, NO contact or similar

Table 4-1: Description of symbols

4.11.3 Basic outputs

CAUTION!
Observe connection polarity.

Current output active (HART®)

- $U_{int, nom}$ = 20 VDC
- I ≤ 22 mA
- R_L ≤ 750 Ω
- HART® at connection terminals A

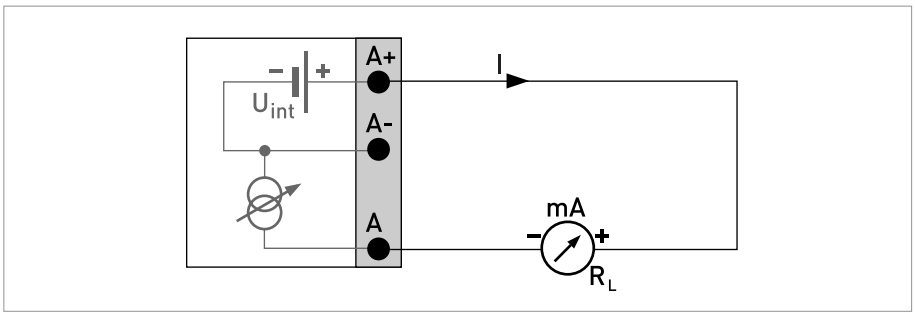

Figure 4-16: Current output active I_a

Current output passive (HART®)

- $U_{int, nom}$ = 20 VDC
- U_{ext} ≤ 32 VDC
- I ≤ 22 mA
- U_0 ≤ 2 V at I = 22 mA
- R_L ≤ (U_{ext} - U_0) / I_{max}
- HART® at connection terminals A

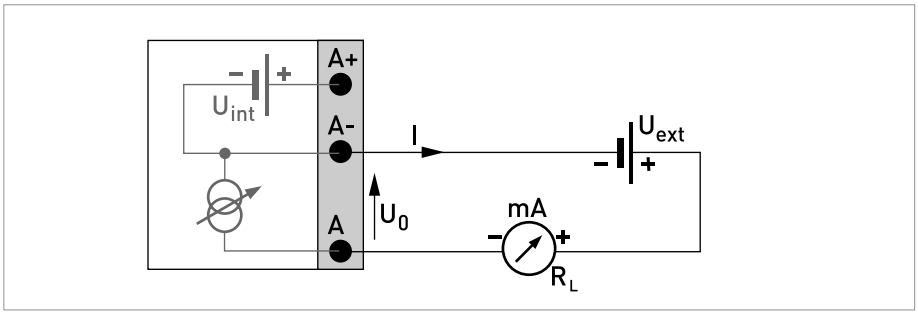

Figure 4-17: Current output passive I_p

INFORMATION!

- *For frequencies above 100 Hz, shielded cables are to be used in order to reduce effects from electrical interferences (EMC).*
- *Shielding takes place at the electrical connection (S) of the output terminal block.*

CAUTION!
Observe connection polarity.

Pulse/frequency output passive

- $U_{ext} \leq 32$ VDC
- f_{max} in operating menu set to 100 Hz < $f_{max} \leq 10$ kHz:
  $I \leq 100$ mA at ≤ 10 kHz (overcontrol up to $f_{max} \leq 12$ kHz)
  open:
  $I \leq 0.1$ mA at $U_{ext} = 5$ V
  $I \leq 0.5$ mA at $U_{ext} = 24$ V
  $I \leq 0.7$ mA at $U_{ext} = 32$ V
  closed:
  $U_{0,\,max} = 0.8$ V at $I \leq 1$ mA
  $U_{0,\,max} = 1.5$ V at $I \leq 10$ mA
  $U_{0,\,max} = 3.5$ V at $I \leq 100$ mA
- If the following maximum load resistance $R_{L,\,max}$ is exceeded, the load resistance R_L must be reduced accordingly by parallel connection of R:
  $f \leq 1$ kHz: $R_{L,\,max} = 10$ kΩ
  $f \leq 10$ kHz: $R_{L,\,max} = 2$ kΩ
- The minimum load resistance $R_{L,\,min}$ is calculated as follows:
  $R_{L,\,min} = (U_{ext} - U_0) / I_{max}$
- Can also be set as status output; for the electrical connection refer to status output connection diagram.
- The output is closed when the device is de-energized.

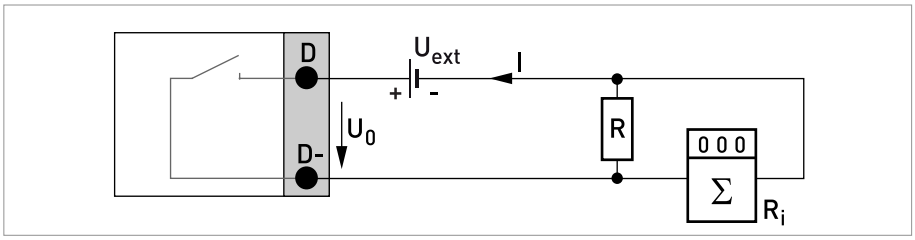

Figure 4-18: Pulse/frequency output passive P_p

CAUTION!
Observe connection polarity.

Status output / limit switch passive

- $U_{ext} \leq 32$ VDC
- $I \leq 100$ mA
- $R_{L,\ max} = 10\ k\Omega$
  $R_{L,\ min} = (U_{ext} - U_0) / I_{max}$
- open:
  $I \leq 0.1$ mA at $U_{ext} = 5$ V
  $I \leq 0.5$ mA at $U_{ext} = 24$ V
  $I \leq 0.7$ mA at $U_{ext} = 32$ V
  closed:
  $U_{0,\ max} = 0.8$ V at $I \leq 1$ mA
  $U_{0,\ max} = 1.5$ V at $I \leq 10$ mA
  $U_{0,\ max} = 3.5$ V at $I \leq 100$ mA
- The output is closed when the device is de-energized.

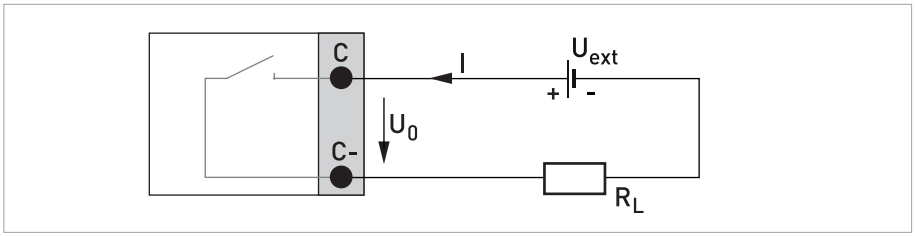

Figure 4-19: Status output / limit switch passive S_p

4.11.4 HART® connection

INFORMATION!

- *The current output at connection terminals A+/A-/A always has HART® capability.*

HART® connection active (point-to-point)

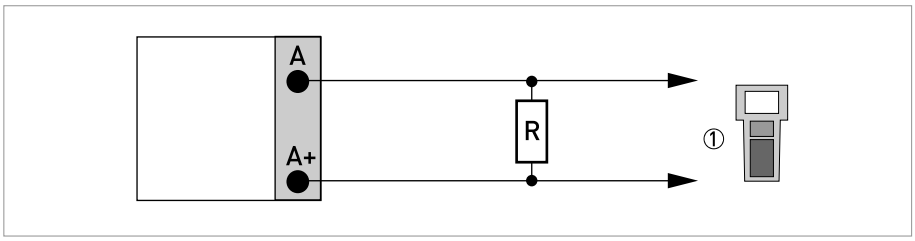

Figure 4-20: HART® connection active (I_a)

① HART® communicator

The parallel resistance to the HART® communicator must be R ≥ 230 Ω.

HART® connection passive (Multi-Drop operation)

- I: $I_{0\%} \geq 4$ mA
- Multi-Drop mode I: $I_{fix} \geq 4$ mA = $I_{0\%}$
- $U_{ext} \leq 32$ VDC
- R ≥ 230 Ω

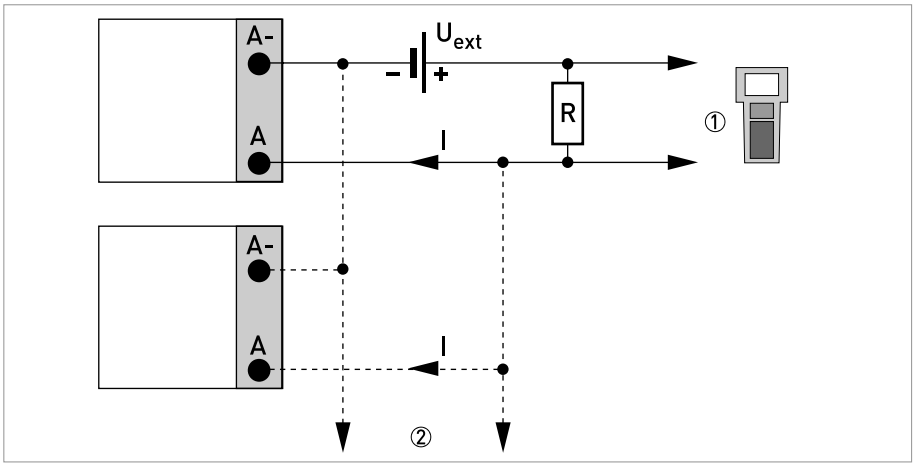

Figure 4-21: HART® connection passive (I_p)

① HART® communicator
② Other HART®- capable devices

5.1 Switching on the power

Before connecting to power, please check that the system has been correctly installed. This includes:

- The device must be mechanically safe and mounted in compliance with the regulations.
- The power connections must have been made in compliance with the regulations.
- The electrical terminal compartments must be secured and the covers have been screwed on.
- Check that the electrical operating data of the power supply are correct.

- Switching on the power.

5.2 Starting the signal converter

The measuring device, consisting of the measuring sensor and the signal converter, is supplied ready for operation. All operating data have been set at the factory in accordance with your order specifications.

When the power is switched on, a self test is carried out. After that the device immediately begins measuring, and the current values are displayed.

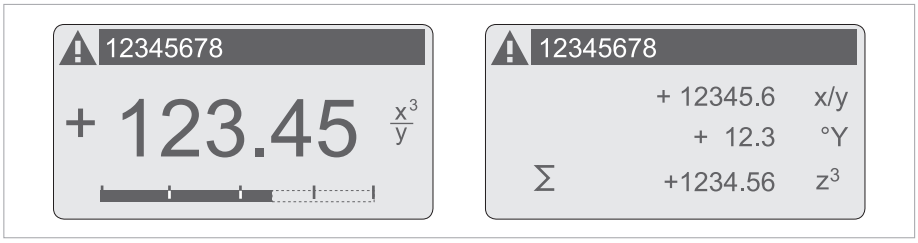

Figure 5-1: Displays in measuring mode (examples for 2 or 3 measured values)
x, y and z denote the units of the measured values displayed

It is possible to change between the two measured value windows, the trend display and the list with the status messages by pressing the keys ↑ and ↓. For information about possible status messages, their meaning and cause refer to *Status messages and diagnostic information* on page 77.

6.1 Display and operating elements

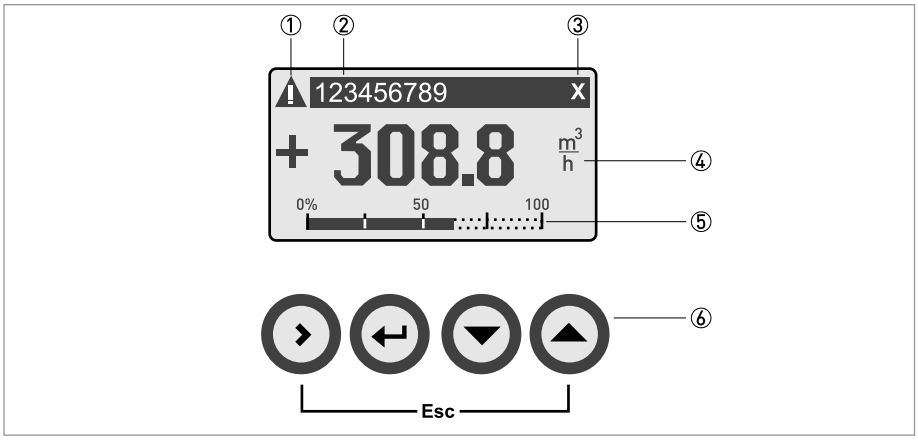

Figure 6-1: Display and operating elements (Example: flow indication with 2 measuring values)

① Indicates a possible status message in the status list
② Tag number (is only indicated if this number was entered previously by the operator)
③ Indicates when a key has been pressed
④ 1st measured variable in large representation
⑤ Bargraph indication
⑥ Keys (see table below for function and representation in text)

INFORMATION!

- *It is recommended to activate the push buttons at right angles to the front. Touching them from the side can cause incorrect operation.*
- *After 5 minutes of inactivity, there is an automatic return to measuring mode. Previously changed data is not saved.*

Key	Measuring mode	Menu mode	Sub-menu or function mode	Parameter and data mode
>	Switch from measuring mode to menu mode; press key for 2.5 s, "Quick Start" menu is then displayed	Access to displayed menu, then 1st submenu is displayed	Access to displayed sub-menu or function	For numerical values, move cursor (highlighted in blue) one position to the right
↵	-	Return to measuring mode but prompt whether the data should be saved	Press 1 to 3 times, return to menu mode, data saved	Return to sub-menu or function, data saved
↓ or ↑	Switch between display pages: measured value 1 + 2, trend page and status page(s)	Select menu	Select sub-menu or function	Use cursor highlighted in blue to change number, unit, setting and to move the decimal point
Esc (> + ↑)	-	-	Return to menu mode without acceptance of data	Return to sub-menu or function without acceptance of data

Table 6-1: Description of key functionality

6.1.1 Display in measuring mode with 2 or 3 measured values

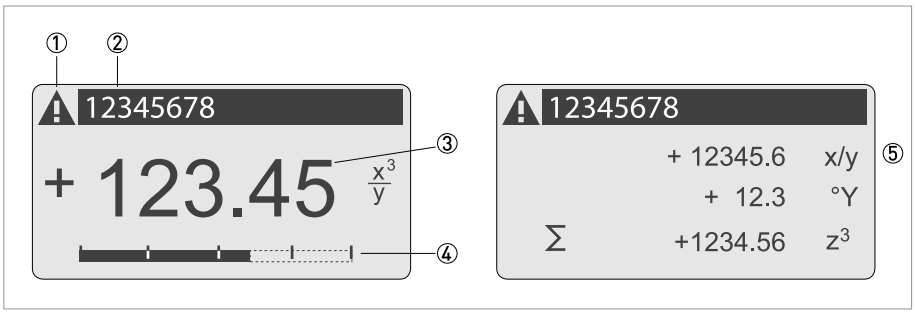

Figure 6-2: Example for display in measuring mode with 2 or 3 measured values

① Indicates a possible status message in the status list
② Tag number (is only indicated if this number was entered previously by the operator)
③ 1st measured variable in large depiction
④ Bargraph indication
⑤ Depiction with 3 measured values

6.1.2 Display for selection of sub-menu and functions, 3 lines

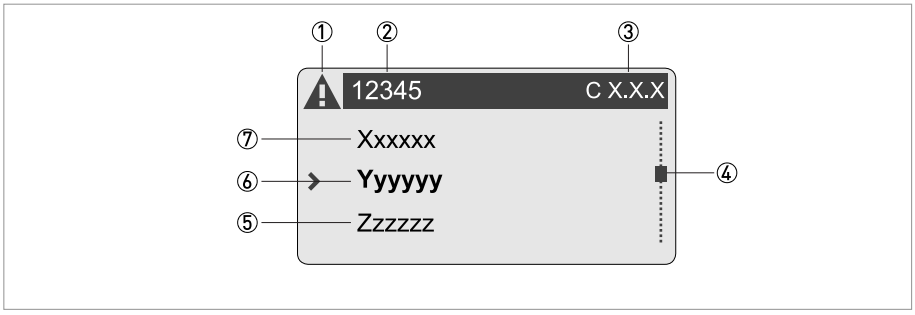

Figure 6-3: Display for selection of sub-menu and functions, 3 lines

① Indicates a possible status message in the status list
② Menu, sub-menu or function name
③ Number relating to ②
④ Indicates position within menu, sub-menu or function list
⑤ Next menu, sub-menu or function
(_ _ _ signalise in this line the end of the list)
⑥ Current menu, sub-menu or function
⑦ Previous menu, sub-menu or function
(_ _ _ signalise in this line the beginning of the list)

6.1.3 Display when setting parameters, 4 lines

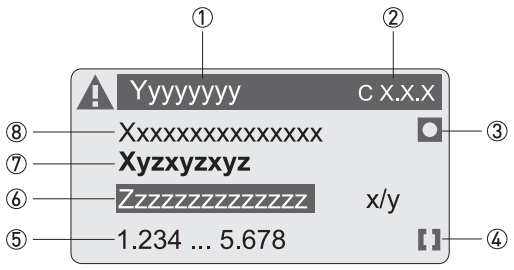

Figure 6-4: Display when setting parameters, 4 lines

① Current menu, sub-menu or function
② Number relating to ①
③ Denotes factory setting
④ Denotes permissible value range
⑤ Permissible value range for numeric values
⑥ Currently set value, unit or function (when selected, appears with white text, blue background) This is where the data is changed.
⑦ Current parameter (open with >)
⑧ Factory setting of parameter (non-alterable)

6.1.4 Display when changing parameters, 4 lines

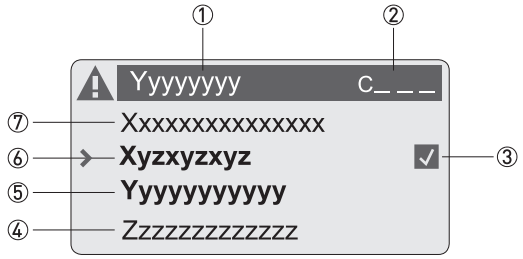

Figure 6-5: Display when changing parameters, 4 lines

① Current menu, sub-menu or function
② Number relating to ①
③ Denotes the change of a parameter (simple to check changed data when browsing through lists)
④ Next parameter
⑤ Currently set data from ⑥
⑥ Current parameter (for selection press key >; then see previous chapter)
⑦ Factory setting of parameter (non-alterable)

6.2 Menu structure

INFORMATION!
Note the key function within and between the columns.

Measuring mode			Select menu	↓ ↑	Select menu and/or sub-menu ↓↑			Select function and set data ↓↑ >
↵		Press > 2.5 s						
		A quick setup		> ↵	A1 language		> ↵	
					A2 Tag			
					A3 reset			
					A3.1 reset errors			
					A3.2 counter 1			
					A3.3 counter 2			
					A4 analogue outputs			
					A4.1 measurement			
					A4.2 unit			
					A4.3 range			
					A4.4 low flow cutoff			
					A4.5 time constant			
					A5 digital outputs			
					A5.1 measurement			
					5.2 pulse value unit			
					A5.3 value p. pulse			
					A5.4 low flow cutoff			
					A7 process input			
					A7.1 device serial no.			
					A7.2 zero calibration			
					A7.3 size			
					A7.5 GKL			
					A7.6 coil resistance Rsp			
					A7.7 calib. coil temp.			
					A7.8 target conduct.			
					A7.9 EF electr. factor			
					A7.10 field frequency			
					A7.11 flow direction			
↵		B test		> ↵	B1 simulation		> ↵	
					B2 actual values			
					B3 information			
		↓↑			↓↑	↓↑		↓↑ >

Measuring mode				Select menu	↓ ↑	Select menu and/or sub-menu ↓↑				Select function and set data ↓↑ >
↵		Press > 2.5 s								
		C setup			> ↵	C1 process input	> ↵	1.1 calibration	> ↵	
								1.2 filter		
								1.3 self test		
								1.4 information		
								1.5 simulation		
↵					> ↵	C2 I/O (Input/Output)	> ↵	2.1 hardware	> ↵	
								2.☐ current output X		
								2.☐ frequency output X		
								2.☐ pulse output X		
								2.☐ status output X		
								2.☐ limit switch X		
↵					> ↵	C3 I/O counter	> ↵	3.1 counter 1	> ↵	
								3.2 counter 2		
↵					> ↵	C4 I/O HART	> ↵	4.1 PV is	> ↵	
								4.2 SV is		
								4.3 TV is		
								4.4 4V is		
								4.5 HART units		
↵					> ↵	C5 device	> ↵	5.1 device info	> ↵	
								5.2 display		
								5.3 1. meas. page		
								5.4 2. meas. page		
								5.5 graphic page		
								5.6 special function		
								5.7 units		
								5.8 HART		
								5.9 quick setup		
		↓↑				↓↑		↓↑		↓↑ >

6.3 Function tables

INFORMATION!
Depending on the device version, not all functions are available.

6.3.1 Menu A, quick setup

No.	Function	Settings / descriptions

A1 language

A1	language	Language selection depends on the device version.

A2 Tag

A2	Tag	Measuring point identifier (Tag no.) (also for HART® operation), appears in the LC display header (up to 8 digits).

A3 reset?

A3	reset?	
A3.1	reset errors	reset errors? Select: no/yes
A3.2	reset counter 1	reset counter? Select: no / yes (available if activated in C5.9.1)
A3.3	reset counter 2	reset counter? Select: no / yes (available if activated in C5.9.2)

A4 analogue outputs (only for HART®)

A4	analogue outputs	Applicable to current output (terminal A), frequency output (terminal D), limit switch (terminal C and/or D) and the first display page / line 1
A4.1	measurement	1) Select: volume flow / mass flow / diagnosis value / flow speed / coil temperature / conductivity
		2) Use for all outputs? (also use this setting for Fct. A4.2...A4.5!) Setting: no (applies only to the main current output) / yes (applies to all analogue outputs)
A4.2	unit	Selection of the unit from a list, depending on the measurement.
A4.3	range	1) Setting for main current output (range: 0...100%) Setting: 0...x.xx (format and unit, depending on measurement, see A4.1 and A4.2 above)
		2) Use for all outputs? Make setting, see Fct. A4.1 above!
A4.4	low flow cutoff	1) Setting for main current output (sets output value to "0") Setting: x.xxx ± x.xxx% (range: 0.0...20%) (1st value = switching point / 2nd value = hysteresis), condition: 2nd value ≤ 1st value
		2) Use for all outputs? Make setting, see Fct. A4.1 above!
A4.5	time constant	1) Setting for main current output (applicable to all flow measurements) Setting: xxx.x s (range: 000.1...100 s)
		2) Use for all outputs? Make setting, see Fct. A4.1 above!

A5 digital outputs

A5	digital outputs	Valid for pulse output (terminal D) and counter 1.
A5.1	measurement	1) Select measurement: volume flow / mass flow
		2) Use for all outputs? (also use this setting for Fct. A5.2...A5.4!) Setting: no (only for pulse output D) / yes (for all digital outputs)
A5.2	pulse value unit	Selection of the unit from a list, depending on the measurement.
A5.3	value p. pulse	1) Setting for pulse output D (volume or mass value per pulse) Setting: xxx.xxx in l/s or kg/s
		2) Use for all outputs? Make setting, see Fct. A5.1 above!
A5.4	low flow cutoff	1) Setting for pulse output D (sets output value to "0") Setting: x.xxx ± x.xxx% (range: 0.0…20%) (1st value = switching point / 2nd value = hysteresis), condition: 2nd value ≤ 1st value
		2) Use for all outputs? Make setting, see Fct. A5.1 above!

process input

A7.1	device serial no.	Serial no. of the system.
The following process input parameters are only available, if the quick access has been activated in the menu "setup / device / quick setup.		
A7.2	zero calibration	Display of current zero calibration value.
		Query: calibrate zero?
		Settings see Fct. C1.1.1.
A7.3	size	Select from size table.
A7.5	GKL	Set value acc. to nameplate; range: 0.5…12 (20)
A7.6	coil resistance Rsp	Field coil resistance at 20°C; range: 10.00...220 Ω
A7.7	calib. coil temp.	The coil temperature is derived from the coil resistance at the reference temperature.
		Settings see Fct. C1.1.8.
A7.8	target conduct.	Reference value for on-site calibration; range: 1.000...50000 µS/cm
A7.9	EF electr. factor	For calculation of the conductivity based on the electrode impedance.
		Settings see Fct. C1.1.11.
A7.10	field frequency	Setting as on measuring sensor nameplate = line frequency x value (from the following list):
		2; 4/3; 2/3; 1/2; 1/4; 1/6; 1/8; 1/12; 1/18; 1/36; 1/50
A7.11	flow direction	Define polarity of flow direction.
		forwards (according to the arrow on the measuring sensor) or backwards (in the opposite direction to the arrow)

6.3.2 Menu B, test

No.	Function	Settings / descriptions

B1 simulation

B1	simulation	Displayed values are simulated.
B1.1	flow speed	Simulation of the flow speed
		Select: break (exit function without simulation) / set value (range: -12...+12 m/s; unit selection in Fct. C5.7.7)
		Query: start simulation? Settings: no (exit function without simulation) / yes (start simulation)
B1.2	volume flow	Volume flow simulation, sequence and settings similar to B1.1, see above!
		X stands for one of the connection terminals A, C or D ☐ stands for Fct. no. B1.3...1.6
B1.☐	current output X	simulation X X stands for one of the connection terminals A, C or D Sequence and settings similar to B1.1, see above! For pulse output a set number of pulses are output in 1 s!
B1.☐	pulse output X	
B1.☐	frequency out X	
B1.☐	limit switch X	
B1.☐	status output X	

B2 actual values

B2	actual values	Display the current values; exit the displayed function with key ↵.
B2.1	operating hours	Display the actual operating hours; exit the displayed function with key ↵.
B2.2	act. flow speed	Display the actual flow speed; exit the displayed function with key ↵.
B2.3	act. coil temp.	See also Fct. C1.1.7...C1.1.8
B2.4	electr. temperature	Display the actual electronics temperature; exit the displayed function with key ↵.
B2.5	act. conductivity	See also Fct. C1.3.1...C1.3.2
B2.6	act. electr. noise	See also Fct. C1.3.13...C1.3.15
B2.8	act. coil resistance	Display the actual resistance of the field coils depending on the current coil temperature.

B3 information

B3	information	LC display
		1st line: ID No. of the circuit board
		2nd line: software version
		3rd line: production date
B3.1	C number	CG number, cannot be changed (input/output version)
B3.2	process input	Process input part of the electronics
B3.3	SW.REV.MS	Information about the device part of the electronics (for HART® devices, including the HART® part) and main software
B3.4	SW.REV.UIS	Information about the user interface of the device
B3.5	"bus interface"	Only appears with Profibus, Modbus and FF.
B3.6	device serial no.	Serial no. of the system.
B3.7	electronic serial no.	Serial number of the electronics assembly
B3.8	Electronic Revision ER	Reference identification number, electronic revision and production date of the device; includes all hardware and software changes

6.3.3 Menu C, setup

No.	Function	Settings / descriptions
C1 process input		
C1.1 calibration		
C1.1	calibration	Grouping of all functions related to measuring sensor calibration.
C1.1.1	zero calibration	Display of actual zero calibration value.
		calibrate zero? Select: break (return with ↵ key) / standard (with factory setting) / manual (display last value, set new value, range: -1.00…+1 m/s) / automatic (shows the current value as the new zero calibration value)
C1.1.2	size	Select from size table.
C1.1.5	GKL	Set value acc. to nameplate; range: 0.5…12 (20)
C1.1.7	coil resistance Rsp	Field coil resistance at 20°C; range: 10.00...220 Ω
C1.1.8	calib. coil temp.	The coil temperature is derived from the coil resistance at the reference temperature.
		Set coil temperature: break (return with ↵ key) standard (= 20°C) automatic (set current temperature); range: -40.0…+200°C
		Set coil resistance: break (return with ↵ key) standard (= setting from Fct. C1.1.7) automatic (= calibration with the current resistance)
C1.1.9	density	Calculation of mass flow with constant density of product; range: 0.1…5 kg/l
C1.1.10	target conduct.	Reference value for on-site calibration; range: 1.000...50000 µS/cm
C1.1.11	EF electr. factor	For calculation of the conductivity based on the electrode impedance.
		Query: calibrate EF? Select: break (return with ↵ key) / standard (with factory setting) / manual (set desired value) / automatic (determines EF according to the setting in Fct. C1.1.10)
C1.1.13	field frequency	Setting as on measuring sensor nameplate = line frequency x value (from the following list):
		1/2; 1/4; 1/6; 1/8; 1/12; 1/18; 1/36; 1/50
C1.1.14	select settling	Select settling (special function)
		Select: standard (fixed allocation) / manual (manual time setting for the settling time for the field current)
C1.1.15	settling time	Only when "manual" selected under Fct. C1.1.14; range: 1.0…250 ms
C1.1.16	line frequency	Set line frequency.
		automatic (measuring & setting; for DC systems fixed setting 50 Hz)
		Select: 50 Hz or 60 Hz (fixed setting)
C1.1.17	act. coil resistance	Display of the actual resistance of the field coil for calculation of the temperature.

C1.2 filter

C1.2	filter	Grouping of all functions related to filter of measuring sensor electronics.
C1.2.1	limitation	Limitation of all flow values, before smoothing by time constant, affects all outputs.
		Settings: -xxx.x / +xxx.x m/s; condition: 1st value < 2nd value
		Range 1st value: -100.0 m/s ≤ value ≤ -0.001 m/s
		Range 2nd value: +0.001 m/s ≤ value ≤ +100 m/s
C1.2.2	flow direction	Define polarity of flow direction.
		forwards (according to the arrow on the measuring sensor) or backwards (in the opposite direction to the arrow)
C1.2.3	time constant	For all flow measurements and outputs.
		xxx.x s; range: 0.0…100 s
C1.2.4	pulse filter	Suppresses noise due to solids, air/gas bubbles and sudden changes in pH.
		Select: off (without pulse filter) / on (with old pulse filter) / automatic (with new pulse filter)
		Pulse filter "on": The change from one measurement value to the next one is limited to the value "pulse limitation" for the total time "pulse width". This filter allows a faster signal tracking for slowly changing flow values.
		Pulse filter "automatic": The raw flow values are collected into a buffer, covering two times the "pulse width" values. This filter is called "median" filter. This filter allows a better suppression of pulse shaped disturbances (particles or air bubbles in very noisy environment).
C1.2.5	pulse width	Length of interference and delays to be suppressed on sudden changes in flow.
		Only available, if pulse filter (Fct. C1.2.4) is "on" or "automatic"
		xx.x s; range: 0.01...10 s
C1.2.6	pulse limitation	Dynamic limitation from one measured value to the next; only effective, if pulse filter (Fct. C1.2.4) is "on".
		xx.x s; range: 0.01...100 m/s
C1.2.7	noise filter	Suppresses noise at low conductivity, high solids content, air and gas bubbles, and chemically inhomogeneous media.
		Select: off (without noise filter) / on (with noise filter)
C1.2.8	noise level	Range within which changes are evaluated as noise, and outside of which changes are evaluated as flow (only with noise filter switched on, Fct. C1.2.7).
		xx.xx m/s; range: 0.01...10 m/s
C1.2.9	noise suppression	Set noise suppression (only when noise filter switched on, Fct. C1.2.7).
		Range: 1…10, noise suppression factor [min = 1...max = 10]
C1.2.10	low flow cutoff	Sets output value of all outputs to "0":
		x.xxx ± x.xxx m/s (ft/s); range: 0.0…20 m/s (0.0...32.8 ft/s)
		(1st value = switching point / 2nd value = hysteresis), condition: 2nd value ≤ 1st value
C1.2.11	conductivity	Setting the time constant for the conductivity measurement; only available, if the conductivity measurement is activated

C1.3 self test

C1.3	self test	Grouping of all functions related to self test of measuring sensor electronics.
C1.3.1	empty pipe	Switch conductivity measurement off and on (measurement of the electrode resistance with or without empty pipe detection).
		Select: off / conductivity (only conductivity measurement) / cond. + empty pipe [F] (conductivity measurement and empty pipe indication, error category [F] application); Flow indication "= 0" when pipe empty / cond. + empty pipe [S] (conductivity measurement and empty pipe indication, error category [S] measurement out of specification); Flow indication "≠ 0" when pipe empty
C1.3.2	limit empty pipe	Only available when empty pipe activated [..] in Fct. C1.3.1.
		Range: 0.0…9999 µS (set max 50% of the lowest occurring conductivity in operation. Conductivity below this value = signal as empty pipe)
C1.3.3	act. conductivity	Only available when empty pipe activated [..] in Fct. C1.3.1.
		Actual conductivity is indicated. Activation takes place only after setting mode is exited!
C1.3.13	electrode noise	Automatic test switched off / on.
		Select: off /on
C1.3.14	limit electr. noise	Only with electrode noise activated, see Fct. C1.3.13.
		Range: 0.000…12 m/s (noise above this threshold generates an error of category [S])
C1.3.15	act. electr. noise	Only available when electrode noise "on" activated in Fct. C1.3.13. Activation takes place only after the setting mode is exited!
C1.3.16	settling of field	Automatic test switched off / on.
		Select: off /on
C1.3.17	diagnosis value	Select diagnosis value for testing the various analogue outputs.
		Select: off (no diagnosis) / electrode noise (activate Fct. C1.3.13) / terminal 2 DC (electrode DC voltage at electrode terminal 2) / terminal 3 DC (electrode DC voltage at electrode terminal 3)

C1.4 information

C1.4	information	Grouping of all functions related to information with respect to measuring sensor and sensor electronics.
C1.4.1	liner	Shows material of the liner.
C1.4.2	electr. material	Shows material of the electrodes.
C1.4.3	calibration date	Not available at this time.
C1.4.4	serial no. sensor	Shows serial no. of the measuring sensor.
C1.4.5	V no. sensor	Shows the order number of the measuring sensor.
C1.4.6	sensor electr. info	Sows serial number of circuit board, software version number and calibration date of circuit board

C1.5 simulation

C1.5	simulation	Grouping of all functions for simulating measuring sensor values. These simulations have effect on all outputs, including counters and display.
C1.5.1	flow speed	Sequence see Fct. B1.1
C1.5.2	volume flow	Sequence see Fct. B1.2

No.	Function	Settings / descriptions

C2 I/O (Inputs/Outputs)

C2.1 hardware

C2.1	hardware	Assignment of connection terminals dependent on signal converter version: active / passive / NAMUR
C2.1.1	terminal A	Select: off (switched off) / current output
C2.1.3	terminal C	Select: off (switched off) / status output / limit switch
C2.1.4	terminal D	Select: off (switched off) / frequency output / pulse output / status output / limit switch

C2.☐ current out X

C2.☐	current out X	X stands for connection terminals A ☐ stands for Fct. no. C2.2 (A)
C2.☐.1	range 0%...100%	Current range for the selected measurement, e.g. 4...20 mA, corresponds to 0...100%
		xx.x ... xx.x mA; range: 0.00...20 mA (condition: 0 mA ≤ 1st value ≤ 2nd value ≤ 20 mA)
C2.☐.2	extended range	Defines the min. and max. limits.
		xx.x...xx.x mA; range: 03.5...21.5 mA (condition: 0 mA ≤ 1st value ≤ 2nd value ≤ 21.5 mA)
C2.☐.3	error current	Specify error current.
		xx.x mA; range: 3...22 mA (condition: outside of extended range)
C2.☐.4	error condition	The following error conditions can be selected.
		Select: error in device (error category [F]) / application error (error category [F]) / out of specification (error category [S])
C2.☐.5	measurement	Measurements for activating the output.
		Select: volume flow / mass flow / diagnosis value / flow speed / coil temperature / conductivity
C2.☐.6	range	0...100% of the measurement set in Fct. C2.☐.5
		0...xx.xx _ _ _ (format and unit depend on the measurement, see above)
C2.☐.7	polarity	Set polarity, please note flow direction in C1.2.2!
		Select: both polarities (plus and minus values are displayed) / positive polarity (display for negative values = 0) / negative polarity (display for positive values = 0) / absolute value (use for the output)
C2.☐.8	limitation	Limitation before applying the time constant.
		±xxx ... ±xxx%; range: -150...+150%
C2.☐.9	low flow cutoff	Sets output value to "0"
		x.xxx ± x.xxx%; range: 0.0...20%
		(1st value = switching point / 2nd value = hysteresis), condition: 2nd value ≤ 1st value

No.	Function	Settings / descriptions
C2.☐.10	time constant	Range: 000.1…100 s
C2.☐.11	special function	Select: off (switched off) / automatic range (range is changed automatically, extended lower range, only makes sense together with a status output)
C2.☐.12	threshold	Appears only when Fct. C2.☐.11 threshold is activated between extended and normal range. The automatic range function always changes from the extended to the normal range when the 100% current is reached.
		The upper 100% value of the hysteresis is then = 0. The threshold is then the hysteresis value, instead of "threshold ± hysteresis" as shown in the display.
		Range: 5.0…80%
		(1st value = switching point / 2nd value = hysteresis), condition: 2nd value ≤ 1st value
C2.☐.13	information	Serial number of the I/O circuit board, software version number and production date of the circuit board
C2.☐.14	simulation	Sequence see B1.☐ current out X
C2.☐.15	4mA trimming	Trimming of the current at 4 mA
		Reset to 4 mA restores the factory calibration.
		Used for HART® setting.
C2.☐.16	20mA trimming	Trimming of the current at 20 mA
		Reset to 20 mA restores the factory calibration.
		Used for HART® setting.

C2.☐ frequency out X

C2.☐	frequency out X	X stands for connection terminals D ☐ stands for Fct. no. C2.5 (D)
C2.☐.1	Pulse Shape	Specify the pulse shape.
		Select: symmetric (about 50% on and 50% off) / automatic (constant pulse with about 50% on and 50% off at 100% pulse rate) / fixed (fixed pulse rate, setting see below Fct. C2.☐.3 100% pulse rate)
C2.☐.2	pulse width	Only available if set to "fixed" in Fct. C2.☐.1.
		Range: 0.05…2000 ms
		Note: max. setting value Tp [ms] ≤ 500 / max. pulse rate [1/s], gives the pulse width = time where the output is activated
C2.☐.3	100% pulse rate	Pulse rate for 100% of the measuring range.
		Range: 0.0…10000 1/s
		Limitation 100% pulse rate ≤ 100/s: I_{max} ≤ 100 mA Limitation 100% pulse rate > 100/s: I_{max} ≤ 20 mA
C2.☐.4	measurement	Measurements for activating the output.
		Select: volume flow / mass flow / diagnosis value / flow speed / coil temperature / conductivity
C2.☐.5	range	0…100% of the measurement set in Fct. C2.☐.4
		0…xx.xx _ _ _ (format and unit depend on the measurement, see above)
C2.☐.6	polarity	Set polarity, please note flow direction in C1.2.2!
		Select: both polarities (plus and minus values are displayed) / positive polarity (display for negative values = 0) / negative polarity (display for positive values = 0) / absolute value (use for the output)
C2.☐.7	limitation	Limitation before applying the time constant.
		±xxx … ±xxx%; range: -150…+150%

No.	Function	Settings / descriptions
C2.☐.8	low flow cutoff	Sets output value to "0":
		x.xxx ± x.xxx%; range: 0.0…20%
		(1st value = switching point / 2nd value = hysteresis), condition: 2nd value ≤ 1st value
C2.☐.9	time constant	Range: 000.1…100 s
C2.☐.10	invert signal	Select: off (activated output generates a high current at the output, switch closed) / on (activated output generates a low current at the output, switch open)
C2.☐.12	information	Serial number of the I/O circuit board, software version number and production date of the circuit board
C2.☐.13	simulation	Sequence see B1.☐ frequency out X

C2.☐ pulse output X

C2.☐	pulse output X	X stands for connection terminals D ☐ stands for Fct. no. C2.5 (D)
C2.☐.1	pulse shape	Specify the pulse shape.
		Select: symmetric (about 50% on and 50% off) / automatic (constant pulse with about 50% on and 50% off at 100% pulse rate) / fixed (fixed pulse rate, setting see below Fct. C2.☐.3 100% pulse rate)
C2.☐.2	pulse width	Only available if set to "fixed" in Fct. C2.☐.1
		Range: 0.05…2000 ms
		Note: max. setting value Tp [ms] ≤ 500 / max. pulse rate [1/s], gives the pulse width = time where the output is activated
C2.☐.3	max. pulse rate	Pulse rate for 100% of the measuring range.
		Range: 0.0…10000 1/s
		Limitation 100% pulse rate ≤ 100/s: I_{max} ≤ 100 mA Limitation 100% pulse rate > 100/s: I_{max} ≤ 20 mA
C2.☐.4	measurement	Measurements for activating the output.
		Select: volume flow / mass flow
C2.☐.5	pulse value unit	Selection of the unit from a list, depending on the measurement.
C2.☐.6	value p. pulse	Set value for volume or mass per pulse.
		xxx.xxx, range in [l] or [kg] (volume or mass for current output C2.☐.6)
		At max. pulse rate see above 2.☐.3 pulse output.
C2.☐.7	polarity	Set polarity, please note flow direction in C1.2.2!
		Select: both polarities (plus and minus values are displayed) / positive polarity (display for negative values = 0) / negative polarity (display for positive values = 0) / absolute value (use for the output)
C2.☐.8	low flow cutoff	Sets output value to "0"
		x.xxx ± x.xxx%; range: 0.0…20%
		(1st value = switching point / 2nd value = hysteresis), condition: 2nd value ≤ 1st value
C2.☐.9	time constant	Range: 000.1…100 s
C2.☐.10	invert signal	Select: off (activated output generates a high current at the output, switch closed) / on (activated output generates a low current at the output, switch open)
C2.☐.12	information	Serial number of the I/O circuit board, software version number and production date of the circuit board
C2.☐.13	simulation	Sequence see B1.☐ pulse output X

No.	Function	Settings / descriptions

C2.☐ status output X

C2.☐	status output X	X (Y) stands for one of the connection terminals C or D ☐ stands for Fct. no. C2.4 (C) / C2.5 (D)
C2.☐.1	Mode	The output shows the following measuring conditions:
		out of specification (output activated, signals application error or error in device refer to *Status messages and diagnostic information* on page 77 / application error (output activated, signals application error or error in device refer to *Status messages and diagnostic information* on page 77 / polarity flow (polarity of the current flow) / over range flow (over range of the flow) / counter 1 preset (activates when counter X preset value is reached) / counter 2 preset (activates when counter X preset value is reached) / output A (activated by the status of output Y, additional output data see below) / output C (activated by the status of output Y, additional output data see below) / output D (activated by the status of output Y, additional output data see below) / off (switched off) / empty pipe (when pipe empty, output activated) / error in device (when error, output activated)
C2.☐.2	current out Y	Only appears if output A is set under "mode (see above)", and this output is a "current output".
		Select: polarity (is signalled) / over range (is signalled) / automatic range signals lower range
C2.☐.2	frequency out Y and pulse output Y	Only appears if output D is set under "mode (see above)", and this output is a "frequency/pulse output".
		Select: polarity (is signalled) / over range (is signalled)
C2.☐.2	status output Y	Only appears if output C or D is set under "mode (see above)", and this output is a "status output".
		Same signal (like other connected status output, signal can be inverted, see below)
C2.☐.2	limit switch Y	Only appears if output C or D is set under "mode (see above)", and this output is a "limit switch".
		Status off (is always selected here if status output X is connected with a limit switch.
C2.☐.2	off	Only appears if output A, C or D is set under "mode (see above)" and this output is switched off.
C2.☐.3	invert signal	Select: off (activated output supplies a high current, switch closed) / on (activated output supplies a low current, switch open)
C2.☐.4	information	Serial number of the I/O circuit board, software version number and production date of the circuit board
C2.☐.5	simulation	Sequence see B1.☐ status output X

C2.☐ limit switch X

C2.☐	limit switch X	X stands for one of the connection terminals C or D ☐ stands for Fct. no. C2.4 (C) / C2.5 (D)
C2.☐.1	measurement	Select: volume flow / mass flow / diagnosis value / flow speed / coil temperature / conductivity
C2.☐.2	threshold	Switching level, set threshold with hysteresis
		xxx.x ±x.xxx (format and unit depend on the measurement, see above)
		(1st value = threshold / 2nd value = hysteresis), condition: 2nd value ≤ 1st value
C2.☐.3	polarity	Set polarity, please note flow direction in C1.2.2!
		Select: both polarities (plus and minus values are displayed) / positive polarity (display for negative values = 0) / negative polarity (display for positive values = 0) / absolute value (use for the output)
C2.☐.4	time constant	Range: 000.1…100 s
C2.☐.5	invert signal	Select: off (activated output generates a high current, switch closed) / on (activated output generates a low current, switch open)
C2.☐.6	information	Serial number of the I/O circuit board, software version number and production date of the circuit board
C2.☐.7	simulation	Sequence see B1.☐ limit switch X

No.	Function	Settings / descriptions

C3 I/O counter

C3.1	counter 1	Set function of counter ☐ ☐ stands for 1, 2 (= counter 1, 2) The basic version (standard) has only 2 counters! These functions are only available for HART® devices.
C3.2	counter 2	
C3.☐.1	function	Select: sum counter (counts positive and negative values) / +counter (counts only the positive values) / -counter (counts only the negative values) / off (counter is switched off)
C3.☐.2	measurement	Selection of the measurement for counter ☐
		Select: volume flow / mass flow
C3.☐.3	low flow cutoff	Sets output value to "0"
		Range: 0.0…20%
		(1st value = switching point / 2nd value = hysteresis), condition: 2nd value ≤ 1st value
C3.☐.4	time constant	Range: 000.1…100 s
C3.☐.5	preset value	If this value is reached, positive or negative, a signal is generated that can be used for a status output at which "preset counter X" has to be set.
		Preset value (max. 8 digits) x.xxxxx in selected unit, see C5.7.10 + 13
C3.☐.6	reset counter	Sequence see Fct. A3.2 and A3.3
C3.☐.7	set counter	Set counter ☐ to the desired value.
		Select: break (exit function) / set value (opens the editor to make the entry)
		Query: set counter?
		Select: no (exit function without setting the value) / yes (sets the counter and exits the function)
C3.☐.8	stop counter	Counter ☐ stops and holds the current value.
		Select: no (exits the function without stopping the counter) / yes (stops the counter and exits the function)
C3.☐.9	start counter	Start counter ☐ after that counter is stopped.
		Select: no (exits the function without starting the counter) / yes (starts the counter and exits the function)
C3.☐.10	information	Serial number of the I/O circuit board, software version number and production date of the circuit board

No.	Function	Settings / descriptions

C4 I/O HART

C4	I/O HART	Selection / display of the 4 dynamic variables (DV) for HART®.
		The HART® current output (terminal A basic I/Os) always has a fixed link to the primary variables (PV). Fixed links of the other DVs (1-3) are only possible if one additional analogue output (frequency) is available; if not, the measurement can be freely selected from the following list: see Fct. A4.1 "measurement".
		☐ stands for 1, 3 or 4 X stands for connection terminals A, C or D
C4.1	PV is	Current output (primary variable)
C4.2	SV is	(secondary variable)
C4.3	TV is	(tertiary variable)
C4.4	4V is	(4th variable)
C4.5	HART units	Changes units of DVs (dynamic variables) in the display
		Break: return with ↵ key
		HART display®: copies the settings for the display units to the settings for DVs
		Standard: sets factory defaults for DVs
C4.☐.1	current out X	Shows the current analogue measured value of the linked current output. The measurement cannot be changed!
C4.☐.1	frequency out X	Shows the current analogue measured value of the linked frequency output, if present. The measurement cannot be changed!
C4.☐.1	HART dynamic var.	Measurements of the dynamic variables for HART®.
		Linear measurements: volume flow / mass flow / diagnosis value / flow speed / coil temperature / conductivity
		Digital measurements: counter 1 / counter 2 / operating hours

No.	Function	Settings / descriptions

C5 device

C5.1 device info

C5.1	device info	Grouping of all functions that have no direct effect on the measurement or any output.
C5.1.1	Tag	Settable characters (max. 8 digits): A...Z; a...z; 0...9; / - , .
C5.1.2	C number	CG number, non-alterable (input/output versions)
C5.1.3	device serial no.	Serial no. of the system.
C5.1.4	electronic serial no.	Serial no. of the electronic assembly, cannot be changed.
C5.1.5	SW.REV.MS	Serial no. of the circuit board, version no. of the main software, production date of the circuit board
C5.1.6	Electronic Revision ER	Reference identification number, electronic revision and production date of the device; includes all hardware and software changes

C5.2 display

C5.2	display	-
C5.2.1	language	Language selection depends on the device version.
C5.2.2	contrast	Adjust display contrast for extreme temperatures. Setting: -9…0…+9
		This change takes place immediately, not just when setting mode is exited!
C5.2.3	default display	Specification of the default display page that is returned to after a short delay period.
		Select:
		none (the current page is always active) / 1. meas. page (show this page) / 2. meas. page (show this page) / status page (show only status messages) / graphic page (trend display of the 1st measurement)
C5.2.5	SW.REV.UIS	Serial no. of the circuit board, version no. of user software, production date of the circuit board

C5.3 & C5.4 1. meas. page & 2. meas. page

C5.3	1. meas. page	☐ stands for 3 = meas. page 1 and 4 = meas. page 2
C5.4	2. meas. page	
C5.☐.1	function	Specify number of measured value lines (font size)
		Select: one line / two lines / three lines
C5.☐.2	measurement 1.line	Specify measurement for 1st line.
		Select: volume flow / mass flow / diagnosis value / flow speed / coil temperature / conductivity
C5.☐.3	range	0…100% of the measurement set in Fct. C5.☐.2
		0…xx.xx _ _ _ (format and unit depend on the measurement)
C5.☐.4	limitation	Limitation before applying the time constant.
		xxx%; range: -120…+120%
C5.☐.5	low flow cutoff	Sets output to "0": x.xxx ± x.xxx %; range: 0.0…20%
		(1st value = switching point / 2nd value = hysteresis), condition: 2nd value ≤ 1st value
C5.☐.6	time constant	Range: 000.1…100 s
C5.☐.7	format 1.line	Specify decimal places.
		Select: automatic (adaptation carried out automatically) / X (= none) …X.XXXXXXXX (max. 8 digits)
C5.☐.8	measurement 2.line	Specify measurement 2.line (only available if this 2.line is activated)
		Select: bar graph (for the measurement selected in 1.line) / volume flow / mass flow / diagnosis value / flow speed / counter 1 / counter 2 / conductivity / coil temperature / operating hours
C5.☐.9	format 2.line	Specify position after decimal point (only available if this 2.line is activated)
		Select: automatic (adaptation carried out automatically) / X (= none) …X.XXXXXXXX (max. 8 digits)
C5.☐.10	measurement 3.line	Specify measurement 3.line (only available if this 3.line is activated)
		Select: volume flow / mass flow / diagnosis value / flow speed / coil temperature / conductivity / counter 1 / counter 2 / operating hours
C5.☐.11	format 3.line	Specify position after decimal point (only available if this 3.line is activated)
		Select: automatic (adaptation carried out automatically) / X (= none) …X.XXXXXXXX (max. 8 digits)

C5.5 graphic page

C5.5	graphic page	Graphic page always shows trend curve of the measurement of the 1. meas. page / 1.line, see Fct. C5.3.2
C5.5.1	select range	Select: manual (set range in Fct. C5.5.2) / automatic (automatic depiction based on the measured values) Reset only after parameter change or after switching off and on.
C5.5.2	range	Set the scaling for the Y axis. Only available if "manual" is set in C5.5.1.
		+xxx ±xxx%; range: -100…+100%
		(1st value = lower limit / 2nd value = upper limit), condition: 1st value ≤ 2nd value
C5.5.3	time scale	Set the time scaling for the X axis, trend curve
		xxx min; range: 0…100 min

C5.6 special function

C5.6	special function	-
C5.6.1	reset errors	reset errors?
		Select: no/yes
C5.6.2	save settings	Save current settings. Select: break (exit function without saving) / backup 1 (save in storage location 1) / backup 2 (save in storage location 2)
		Query: continue copy? (cannot be done afterwards) Select: no (exit function without saving) / yes (copy current settings to storage backup 1 or backup 2)
C5.6.3	load settings	Load saved settings. Select: break (exit function without loading) / factory settings (load in state as delivered) / backup 1 (load data from storage location 1) / backup 2 (load data from storage location 2) / load sensor data (factory settings of calibration data)
		Query: continue copy? (cannot be done afterwards) Select: no (exit the function without saving) / yes (load data from the selected storage location)
C5.6.4	password quick set	Password required to change data in the quick setup menu.
		0000 (= to Quick Setup menu without password)
		xxxx (password required); range 4digit: 0001…9999
C5.6.5	password setup	Password required to change data in the setup menu.
		0000 (= to Quick Setup menu without password)
		xxxx (password required); range 4digit: 0001…9999

C5.7 units

C5.7	units	-
C5.7.1	volume flow	m^3/h; m^3/min; m^3/s; l/h; l/min; l/s (l = litres); ft^3/h; ft^3/min; ft^3/s; gal/h; gal/min; gal/s; IG/h; IG/min; IG/s; free unit (set factor and text in the next two functions, sequence see below)
C5.7.2	Text free unit	For text to be specified refer to *Set free units* on page 75:
C5.7.3	[m^3/s]*factor	Specification of the conversion factor, based on m^3/s:
		xxx.xxx refer to *Set free units* on page 75
C5.7.4	mass flow	kg/s; kg/min; kg/h; t/min; t/h; g/s; g/min; g/h; lb/s; lb/min; lb/h; ST/min; ST/h (ST = Short Ton); LT/h (LT = Long Ton); free unit (set factor and text in the next two functions, sequence see below)
C5.7.5	Text free unit	For text to be specified refer to *Set free units* on page 75:
C5.7.6	[kg/s]*factor	Specification of the conversion factor, based on kg/s:
		xxx.xxx refer to *Set free units* on page 75
C5.7.7	flow speed	m/s; ft/s
C5.7.8	conductivity	µS/cm; S/m
C5.7.9	temperature	°C; °F; K
C5.7.10	volume	m^3; l (litre); hl; ml; gal; IG; in^3; ft^3; yd^3; free unit (set factor and text in the next two functions, sequence see below)
C5.7.11	Text free unit	For text to be specified refer to *Set free units* on page 75:
C5.7.12	[m^3]*factor	Specification of the conversion factor, based on m^3:
		xxx.xxx refer to *Set free units* on page 75
C5.7.13	mass	kg; t; mg; g; lb; ST; LT; oz; free unit (set factor and text in the next two functions, sequence see below)
C5.7.14	Text free unit	For text to be specified refer to *Set free units* on page 75:
C5.7.15	[kg]*factor	Specification of the conversion factor, based on kg:
		xxx.xxx refer to *Set free units* on page 75
C5.7.16	density	kg/l; kg/m^3; lb/ft^3; lb/gal; free unit (set factor and text in the next two functions, sequence see below)
C5.7.17	Text free unit	For text to be specified refer to *Set free units* on page 75:
C5.7.18	[kg/m^3]*factor	Specification of the conversion factor, based on kg/m^3:
		xxx.xxx refer to *Set free units* on page 75

C5.8 HART

C5.8	HART	This function is only available for devices with a HART® interface!
C5.8.1	HART	Switch HART® communication on/off
		Select: on (HART® active) current = 4…20 mA / off (HART® not active) current = 0…20 mA
C5.8.2	address	Set address for HART® operation.
		Select: 00 (point-to-point operation, current output has normal function, current = 4…20 mA) / 01…15 (Multi-Drop operation, current output has a constant setting of 4 mA)
C5.8.3	message	Set required text:
		A…Z ; a…z ; 0…9 ; / - + , . *
C5.8.4	description	Set required text:
		A…Z ; a…z ; 0…9 ; / - + , . *

C5.9 quick setup

C5.9	quick setup	Activate quick access in quick setup menu; default setting: quick setup is active (yes)
		Select: yes (activated) / no (not activated)
C5.9.1	reset counter 1	Reset counter 1 in quick setup menu
		Select: yes (activated) / no (not activated)
C5.9.2	reset counter 2	Reset counter 2 in quick setup menu
		Select: yes (activated) / no (not activated)
C5.9.4	process input	Activate quick access to the important process input parameters
		Select: yes (activated) / no (not activated)

6.3.4 Set free units

Free units	Sequences to set texts and factors
Texts	
Volume flow, mass flow and density:	3 digits before and after the slash xxx/xxx (max. 3 digits before / after the slash)
Volume, mass:	xxx (max. 3 digits)
Permissible characters:	A…Z ; a…z ; 0…9 ; / - + , .*; @ $ % ~ () [] _
Conversion factors	
Desired unit	= [unit see above] * conversion factor
Conversion factor	Max. 9 digits
Shift decimal point:	↑ to the left and ↓ to the right

6.4 Description of functions

6.4.1 Reset counter in quick setup menu

INFORMATION!
It may be necessary to activate resetting of the counter in the Quick Setup menu.

Button	Display	Description and setting
>	quick setup	Press and hold for 2.5 s, then release the key.
>	language	-
2 x ↓	reset	-
>	reset errors	-
↓	counter 1	Select desired counter.
↓	counter 2	
↓	counter 3	
>	reset counter no	-
↓ or ↑	reset counter yes	-
↵	counter 1, 2	Counter has been reset.
3 x ↵	Measuring mode	-

6.4.2 Deleting error messages in the quick setup menu

INFORMATION!
For the detailed list of the possible error messages refer to Status messages and diagnostic information on page 77.

Key	Display	Description and setting
>	quick setup	Press and hold for 2.5 s, then release the key.
>	language	
2 x ↓	reset	
>	reset errors	
>	reset? no	
↓ or ↑	reset? yes	
↵	reset errors	Error has been reset.
3 x ↵	Measuring mode	

6.5 Status messages and diagnostic information

Operational faults in device

Messages on the display	Description	Actions
Status: F _ _ _ _ _	**Operational fault in device, mA output ≤ 3.6 mA or set fault current (depending on the seriousness of the fault), status output open, pulse / frequency output: no pulses**	**Repair necessary.**
F error in device	Fault or failure of device. Parameter or hardware error. No measurement possible.	Group message, when one of the following or some other severe error occurs.
F IO 1	Error, operational fault in IO 1. Parameter or hardware error. No measurement possible.	Load settings (Fct. C4.6.3) (backup 1, backup 2 or factory settings). If status message still does not disappear, replace electronic unit.
F parameter	Error, operational fault of data manager, electronic unit, parameter or hardware error. Parameters no longer usable.	
F IO 2	Error, operational fault in IO 2. Parameter or hardware error. No measurement possible.	
F configuration	Invalid configuration: display software, bus parameter or main software do not match existing configuration.	If device configuration unchanged: defective, replace electronic unit.
F display	Error, operational fault in display. Parameter or hardware error. No measurement possible.	Defective, replace electronic unit.
F sensor electronic	Error, operational fault in sensor electronics. Parameter or hardware error. No measurement possible.	Defective, replace electronic unit.
F sensor global	Data error in the global data of the measuring sensor electronic equipment.	Load settings (Fct. C5.6.3) (backup 1, backup 2 or factory settings). If status message still does not disappear, replace electronic unit.
F sensor local	Data error in the local data of the measuring sensor electronic equipment.	Defective, replace electronic unit.
F field current local	Data error in the local data of the field current supply.	Defective, replace electronic unit.
F current output A	Error, operational fault in current output. Parameter or hardware error. No measurement possible.	Defective, replace electronic unit.
F software user interface	Fault revealed by CRC check of operation software.	Replace electronic unit.
F hardware settings	The set hardware parameters do not match the identified hardware. A dialogue appears in the display.	Answer queries in dialogue mode, follow directions. Defective, replace electronic unit.
F hardware detection	Existing hardware cannot be identified.	Defective, replace electronic unit.
F RAM/ROM error IO1	A RAM or ROM error is detected during the CRC check.	Defective, replace electronic unit.
F RAM/ROM error IO2		
F Fieldbus	Malfunction of the Fieldbus interface.	-

Application error

Messages on the display	Description	Actions
Status: F _ _ _ _ _	**Application fault, device OK, but measured values affected.**	**Application test or operator action necessary.**
F application error	Application-dependent fault, but device is OK.	Group message, when errors as described below or other application errors occur.
F empty pipe	1 or 2 measuring electrodes are not in contact with the medium; measured value is set to zero. No measurement possible.	Measuring pipe not filled, function dependent on Fct. C1.3.2.; Check installation. Or electrodes completely insulated e.g. by oil film. Clean!
	The two empty pipe messages cannot appear at the same time. The difference lies in whether the measured value is also set to zero upon the detection of an empty pipe. The sensor electronics will use one or the other function (setting to zero or further measurement) depending on a selection made by the user.	
F flow exceeding limit	Measuring range exceeded, filter setting limits measured values. No message if empty pipe.	Limitation Fct. C1.2.1, increase values.
	If this limit occurs sporadically in processes with air pockets, solid contents or low conductivity, then either the limit has to be increased or a pulse filter used so as to quell the error messages and also reduce the measurement errors.	
F field frequency too high	Field frequency is not reaching steady state, a measured flow value is still being supplied but may have errors. Measured values are still supplied, but they are always too low. No message if coil broken or bridged.	If Fct. C1.1.14 settling time is set to "manual", increase value in Fct. C1.1.15. If "standard" is set, set field frequency in Fct. C1.1.13 acc. to signal converter nameplate.
F DC offset	ADC over-ranged by DC offsets. No measurement can be performed, the flow is set to zero. No message if empty pipe.	For remote signal converters, check the connection of the signal cable.
F open circuit A	Load on current output A too high, effective current too low.	Current not correct, mA output cable has open circuit or load too high. Check cable, reduce load (set < 750 ohm).
F over range A	The current or the corresponding measured value is limited by a filter setting.	Check with Fct. C2.1 hardware or sticker in terminal compartment, which output is connected to the terminal. If current output: extend Fct. C2.x.6 range and Fct. C2.x.8 limitation. If frequency output: extend values in Fct. C2.x.5 and Fct. C2.x.7.
F over range A	The pulse rate or the corresponding measured value is limited by a filter setting. Or the demanded pulse rate is too high.	
F active settings	Error during the CRC check of the active settings.	Upload backup 1 or backup 2 settings, check and adjust if necessary.
F factory settings	Error during the CRC check of the factory settings.	-
F backup 1 settings	Error during the CRC check of the backup 1 or 2 settings.	Save active settings in backup 1 or 2.
F backup 2 settings		
F wiring A	The current at the current input is less than 0.5 mA or greater than the limit switch of 23 mA.	-

Measurements out of specification

Messages on the display	Description	Actions
Status: S _ _ _ _ _	**Out of specification, measurement continues, accuracy possibly less.**	**Maintenance required.**
S uncertain measurement	Device maintenance necessary; measured values only conditionally usable.	Group message, when errors as described below or other influences occur.
S empty pipe	1 or 2 measuring electrodes are not in contact with the medium; measured value is not set to zero. Measurement continues.	Filling level of EMF less than 50% or electrodes completely insulated. If "0" to be indicated when pipe is empty, activate in Fct. C1.3.1 "cond.+empty pipe [F]".
	The two empty pipe messages cannot appear at the same time. The difference lies in whether the measured value is also set to zero upon the detection of an empty pipe. The sensor electronics will use one or the other function (setting to zero or further measurement) depending on a selection made by the user.	
S electrode noise	Noise on the electrodes too high. Measured values are still supplied. No message if empty pipe.	a) Electrodes extremely soiled; b) Conductivity too low: activate noise or pulse filter Fct. C1.2.4, C1.2.7; c) Gas bubbles, solids or chem. reactions in medium: activate noise or pulse filter Fct. C1.2.4, C1.2.7; d) Electrode corrosion (if message also appears when flow is zero): use sensor with suitable electrode material.
S gain error	Preamplifier not equal to the calibrated value; check calibration. Measured values are still supplied.	Defective, replace electronic unit.
S field coil broken	Field coil resistance too high.	Check field coil connections to the electronic module (for remote versions: field current cable) for open circuit / short circuit
S field coil bridged	Field coil resistance too low.	
S field current deviation	Measured field current not equal to the calibrated value. Check calibration. Measured values are still supplied. No message if coil broken or bridged.	Check field current connections. If OK: defective, replace electronic unit.
S electronic temperature	Upper limit for the permissible electronic temperature has been exceeded.	Ambient temperature too high, direct solar radiation or, for C version, process temperature too high.
S coil temperature	Upper limit for the permissible coil temperature has been exceeded. No message if coil broken/bridged.	Process and ambient temperature too high.
S overflow counter 1	This is counter 1 or FB2 (with Profibus). Counter has overrun and started again at zero.	-
S overflow counter 2	This is counter 2 or FB3 (with Profibus). Counter has overrun and started again at zero.	-
S backplane invalid	The data record on the backplane is invalid. The CRC check has revealed a fault.	No data can be loaded from the backplane when replacing electronics. Save the data to the backplane again (Service).

Simulation of the measured values

Messages on the display	Description	Actions
Status: C _ _ _ _ _	**Output values partially simulated or fixed**	**Maintenance required.**
C checks in progress	Test mode of the device. Measured values are possibly simulated values or values with fixed settings.	Message depending on the situation via HART® or FDT.
C test sensor	Test function of the measuring sensor electronics is active.	-
C simulation fieldbus	Values on the Foundation Fieldbus interface are simulated.	-

Information

Messages on the display	Description	Actions
Status: I _ _ _ _ _	**Information (current measurement OK)**	
I counter 1 stopped	This is counter 1 or FB2 (with Profibus). The counter has stopped.	If counter to continue counting, activate "yes" in Fct. C2.y.9 (start counter).
I counter 2 stopped	This is counter 2 or FB3 (with Profibus). The counter has stopped.	
I power fail	The device was not in operation for an unknown period of time, because the power was switched off. This message is for information only.	Temporary power failure. Counters did not run during it.
I over range display 1	1st line on page 1 (2) of display limited by filter setting.	Menu display Fct. C4.3 and/or C4.4, select 1st or 2nd meas. page and increase values in functions C4.z.3 range and/or C4.z.4 limitation.
I backplane sensor	The data on the backplane are not usable because they have been generated with an incompatible version.	-
I backplane settings	The global settings on the backplane are not usable because they have been generated with an incompatible version.	-
I backplane difference	The data on the backplane differ from the data in the display. If the data are usable, a dialogue is indicated in the display.	-
I write cycles overfl.	The maximum number of write cycles of the EEPROM or FRAMS on the Profibus DP PCB has been exceeded.	-
I baudrate search	The baudrate of the Profibus DP interface is searched for.	-
I no data exchange	There is no data exchange between the signal converter and the Profibus.	-
I conductivity off	Conductivity measurement switched off.	Changing of settings in Fct. C1.3.1.
I diagnosis channel off	Diagnosis value switched off.	Changing of settings in Fct. C1.3.17.

7.1 Spare parts availability

The manufacturer adheres to the basic principle that functionally adequate spare parts for each device or each important accessory part will be kept available for a period of 3 years after delivery of the last production run for the device.

This regulation only applies to spare parts which are under normal operating conditions subjects to wear and tear.

7.2 Availability of services

The manufacturer offers a range of services to support the customer after expiration of the warranty. These include repair, technical support and training.

INFORMATION!
For more precise information, please contact your local representative.

7.3 Returning the device to the manufacturer

7.3.1 General information

This device has been carefully manufactured and tested. If installed and operated in accordance with these operating instructions, it will rarely present any problems.

CAUTION!
Should you nevertheless need to return a device for inspection or repair, please pay strict attention to the following points:

- *Due to statutory regulations on environmental protection and safeguarding the health and safety of our personnel, manufacturer may only handle, test and repair returned devices that have been in contact with products without risk to personnel and environment.*
- *This means that the manufacturer can only service this device if it is accompanied by the following certificate (see next section) confirming that the device is safe to handle.*

CAUTION!
If the device has been operated with toxic, caustic, flammable or water-endangering products, you are kindly requested:

- *to check and ensure, if necessary by rinsing or neutralizing, that all cavities are free from such dangerous substances,*
- *to enclose a certificate with the device confirming that is safe to handle and stating the product used.*

7.3.2 Form (for copying) to accompany a returned device

Company:		Address:
Department:		Name:
Tel. no.:		Fax no.:
Manufacturer's order no. or serial no.:		
The device has been operated with the following medium:		
This medium is:		water-hazardous
		toxic
		caustic
		flammable
		We checked that all cavities in the device are free from such substances.
		We have flushed out and neutralized all cavities in the device.
We hereby confirm that there is no risk to persons or the environment through any residual media contained in the device when it is returned.		
Date:		Signature:
Stamp:		

7.4 Disposal

CAUTION!
Disposal must be carried out in accordance with legislation applicable in your country.

8.1 Measuring principle

An electrically conductive fluid flows inside an electrically insulating pipe through a magnetic field. This magnetic field is generated by a current, flowing through a pair of field coils. Inside of the fluid, a voltage U is generated:

U = v * k * B * D

in which:
v = mean flow velocity
k = factor correcting for geometry
B = magnetic field strength
D = inner diameter of flow meter

The signal voltage U is picked off by electrodes and is proportional to the mean flow velocity v and thus the flow rate q. A signal converter is used to amplify the signal voltage, filter it and convert it into signals for totalising, recording and output processing.

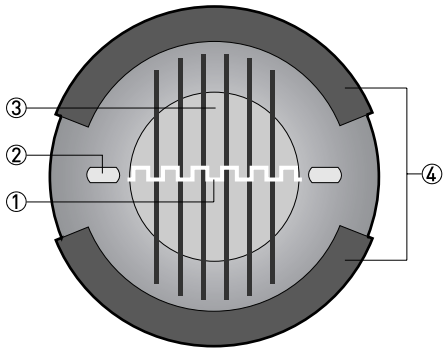

① Induced voltage (proportional to flow velocity)
② Electrodes
③ Magnetic field
④ Field coils

8.2 Technical data

INFORMATION!

- *The following data is provided for general applications. If you require data that is more relevant to your specific application, please contact us or your local representative.*
- *Additional information (certificates, special tools, software,...) and complete product documentation can be downloaded free of charge from the website .*

Measuring system

Measuring principle	Faraday's law of induction
Application range	Continuous measurement of current volume flow, flow velocity, conductivity, mass flow (at constant density), coil temperature of the measuring sensor

Design

Modular design	The measuring system consists of a measuring sensor and a signal converter.
Measuring sensor	
VersaFlow Mag 100	DN10...150 / 3/8...6"
VersaFlow Mag 1000	DN25...1200 / 1...48"
VersaFlow Mag 4000	DN2.5...1200 / 1/10...48"
VersaFlow Mag 2000	Flange: DN15...300 / ½...12" Sandwich: DN2.5...100 / 1/10...4"
VersaFlow Mag 3000	DN2.5...150 / 1/10...6"
	With the exception of the VersaFlow Mag 100 all measuring sensors are also available in an Ex-version.
Signal converter	
Compact version (C)	TWM 1000 C (0° & 45° version)
Remote version (W)	TWM 1000 W
	All signal converters are also available in Ex-versions.
Options	
Outputs	Current- (incl. HART®), pulse, frequency, status output and/or limit switch
Totalizer	2 internal counters with a max. of 8 counter places (e.g. for counting volume and/or mass units)
Verification	Integrated verification, diagnostic functions: measuring device, empty pipe detection, stabilization

Display and user interface	
Graphic display	LC display, backlit white.
	Size: 128 x 64 pixels, corresponds to 59 x 31 mm = 2.32" x 1.22"
	Ambient temperatures below -25°C / -13°F, may affect the readability of the display.
Operating elements	4 push buttons for operator control of the signal converter without opening the housing.
Remote control	PACTware® (incl. Device Type Manager (DTM)) (in preparation)
	HART® Hand Held Communicator from Emerson Process (in preparation)
	AMS® from Emerson Process (in preparation)
	PDM® from Siemens (in preparation)
	All DTMs and drivers are available free of charge from the manufacturer's website.
Display functions	
Operating menu	Setting the parameters using 2 measured value pages, 1 status page, 1 graphics page (measured values and graphics are freely adjustable)
Language display texts	English, French, German, Dutch, Polish, Portuguese, Danish, Spanish, Swedish, Slovenian, Italian (others on request)
Units	Metric, British and US units selectable as required from lists for volume / mass flow and counting, flow velocity, electrical conductivity, temperature

Measuring accuracy

Reference conditions	Medium: water
	Temperature: 20°C / 68°F
	Pressure: 1 bar / 14.5 psi
	Inlet section: ≥ 5 DN
Maximum measuring error	±0.3% of the measured value ±1 mm/s, depending on the measuring sensor
	For detailed information and accuracy curves, refer to chapter "Accuracy".
Repeatability	±0.1%

Operating conditions

Temperature	
Process temperature	Refer to technical data for the measuring sensor.
Ambient temperature	Depends on the version and combination of outputs.
	It is a good idea to protect the converter from external heat sources such as direct sunlight as higher temperatures reduce the life cycle of all electronic components.
	Ambient temperatures below -25°C / -13°F, may affect the readability of the display.
Storage temperature	-40...+70°C / -40...+158°F
Pressure	
Medium	Refer to technical data for the measuring sensor.
Ambient pressure	Atmospheric
Chemical properties	
Electrical conductivity	All media except for water: ≥ 5 µS/cm (also refer to the technical data for the measuring sensor)
	Water: ≥ 20 µS/cm
Physical condition	Conductive, liquid media
Solid content (volume)	≤ 10%
Gas content (volume)	≤ 3%
Flow rate	For detailed information, refer to chapter "Flow tables".
Other conditions	
Protection category acc. to IEC 529 / EN 60529	IP66/67 (acc. to NEMA 4/4X)

Installation condtitions

Installation	For detailed information, refer to chapter "Installation conditions".
Inlet/outlet runs	Refer to technical data for the measuring sensor.
Dimensions and weights	For detailed information refer to chapter "Dimensions and weights".

Materials

Signal converter housing	Die-cast aluminium (polyurethane coated)
Measuring sensor	For housing materials, process connections, liners, grounding electrodes and gaskets, see the technical data for the measuring sensor.

Electrical connection

General	Electrical connection is carried out in conformity with the VDE 0100 directive "Regulations for electrical power installations with line voltages up to 1000 V" or equivalent national regulations.
Power supply	100…230 VAC (-15% / +10%), 50/60 Hz; non-Ex: standard; Ex: optional 240 VAC + 5% is included in the tolerance range.
	12...24 VDC (-55% / +30%); only available in non Ex version 12 VDC - 10% is included in the tolerance range.
	24 VAC/DC (AC: -15% / +10%; DC: -25% / +30%); only available as Ex version 12 V is **not** included in the tolerance range.
Power consumption	AC: 7 VA
	DC: 4 W
Signal cable	Only necessary for remote device versions.
	DS 300 (type A) Max. length: 600 m / 1950 ft (depending on electrical conductivity and version of measuring sensor)
Cable entries	Standard: M20 x 1.5 (8...12 mm)
	Option: ½" NPT, PF ½

Outputs

General	All outputs are electrically isolated from each other and from all other circuits.
	All operating data and output values can be adjusted.
Description of used abbreviations	U_{ext} = external voltage; R_L = load + resistance; U_o = terminal voltage; I_{nom} = nominal current
Current output	
Output data	Volume flow, mass flow, diagnostics value, flow velocity, coil temperature, conductivity
Settings	**Without HART®**
	Q = 0%: 0…20 mA; Q = 100%: 10…21.5 mA
	Error identification: 0…22 mA
	With HART®
	Q = 0%: 4…20 mA; Q = 100%: 10…21.5 mA
	Error identification: 3.5…22 mA
Operating data	
Active	$U_{int, nom}$ = 20 VDC $I \leq 22$ mA $R_L \leq 750\ \Omega$
Passive	$U_{ext} \leq 32$ VDC $I \leq 22$ mA $U_0 \leq 2$ V at I = 22 mA $R_L \leq (U_{ext} - U_0) / I_{max}$

HART®	
Description	HART® protocol via active and passive current output
	HART® version: V5
	Universal HART® parameter: completely integrated
Load	≥ 250 Ω at HART® test point; Note maximum load for current output!
Multi-Drop operation	Yes, current output = 4 mA
	Multi-Drop address adjustable in operation menu 1…15
Device driver	Available for FC 375/475, AMS, PDM, FDT/DTM
Registration (HART Communication Foundation)	Yes
Pulse or frequency output	
Output data	Pulse output: volume flow, mass flow
	Frequency output: volume flow, mass flow, diagnostic value, flow velocity, coil temperature, conductivity
Function	Adjustable as pulse or frequency output
Pulse rate/frequency	0.01...10000 pulses/s or Hz
Settings	Pulses per volume or mass unit or max. frequency for 100% flow
	Pulse width: setting automatic, symmetric or fixed (0.05...2000 ms)
Operating data	
Passive	$U_{ext} \leq 32$ VDC
	f_{max} in operating menu set to $f_{max} \leq 100$ Hz: $I \leq 100$ mA open: $I \leq 0.05$ mA at $U_{ext} = 32$ VDC closed: $U_{0,\,max} = 0.2$ V at $I \leq 10$ mA $U_{0,\,max} = 2$ V at $I \leq 100$ mA
	f_{max} in operating menu set to 100 Hz < $f_{max} \leq 10$ kHz: $I \leq 20$ mA open: $I \leq 0.05$ mA at $U_{ext} = 32$ VDC closed: $U_{0,\,max} = 1.5$ V at $I \leq 1$ mA $U_{0,\,max} = 2.5$ V at $I \leq 10$ mA $U_{0,\,max} = 5.0$ V at $I \leq 20$ mA
Low flow cut-off	
Function	Switching point and hysteresis separately adjustable for each output, counter and the display
Switching point	Set in increments of 0.1.
	0…20% (current output, frequency output) or 0...±9.999 m/s (pulse output)
Hysteresis	Set in increments of 0.1.
	0…5% (current output, frequency output) or 0…5 m/s (pulse output)

Time constant	
Function	The time constant corresponds to the elapsed time until 67% of the end value has been reached according to a step function.
Settings	Set in increments of 0.1.
	0…100 s
Status output / limit switch	
Function and settings	Adjustable as automatic measuring range conversion, display of flow direction, counter overflow, error, switching point or empty pipe detection
	Valve control with activated dosing function
	Status and/or control: ON or OFF
Operating data	
Passive	$U_{ext} \leq 32$ VDC $I \leq 100$ mA open: $I \leq 0.05$ mA at $U_{ext} = 32$ VDC closed: $U_{0,\ max} = 0.2$ V at $I \leq 10$ mA $U_{0,\ max} = 2$ V at $I \leq 100$ mA
Modbus (in preparation)	
Description	Modbus RTU, Master / Slave, RS485
Address range	1…247
Broadcast	Supported with function code 16
Supported Baudrate	1200, 2400, 4800, 9600, 19200, 38400, 57600, 115200 Baud

Approvals and certificates

CE	The device fulfils the statutory requirements of the EC directives. The manufacturer certifies that these requirements have been met by applying the CE marking.
Non-Ex	Standard
Hazardous areas	
ATEX	**Optional (VersaFlow Mag 1000 C and VersaFlow Mag 4000 C with TWM 1000 only)**
	II 2 G Ex e [ia] mb IIC T4 (DN10...20; DN200...300; DN350...3000)
	II 2 G Ex d e [ia] mb IIC T4 (DN25...150)
	II 2 G Ex e [ia] mb q T4/T3 (DN25...150; DN200...300)
	II 2 D Ex tD A21 IP64 T120°C (all nominal sizes)
	Option (only version W)
	II 2 G Ex e [ia] mb IIC T4
	II 2 D Ex tD A21 IP64 T135°C
Other standards and approvals	
Shock and vibration resistance	IEC 68-2-3
Electromagnetic compatibility (EMC)	2004/108/EC in conjunction with EN 61326-1 (A1, A2)
European Pressure Equipment Directive	PED 97/23 (only for compact versions)
NAMUR	NE 21, NE 43, NE 53

8.3 Dimensions and weights

8.3.1 Housing

Wall-mounted version

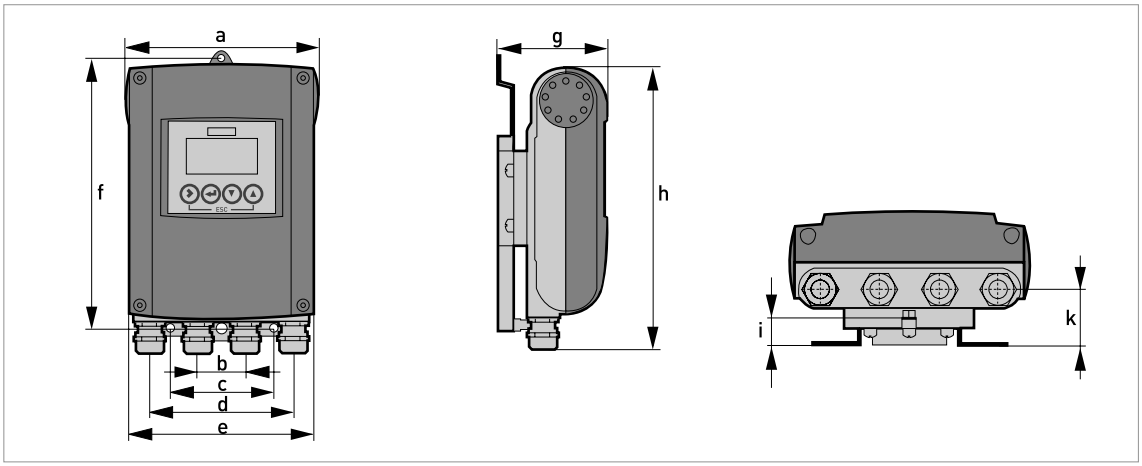

Dimensions and weights in mm and kg

	Dimensions [mm]										Weight [kg]
	a	b	c	d	e	f	g	h	i	k	
Wall-mounted version	161	40	87.2	120	155	241	95.2	257	19.3	39.7	Std: 1.9 Ex: 2.4

Dimensions and weights in inches and lb

	Dimensions [inch]										Weight [lb]
	a	b	c	d	e	f	g	h	i	k	
Wall-mounted version	6.34	1.57	3.43	4.72	6.10	9.50	3.75	10.12	0.76	1.56	Std: 4.2 Ex: 5.3

Compact 0° version

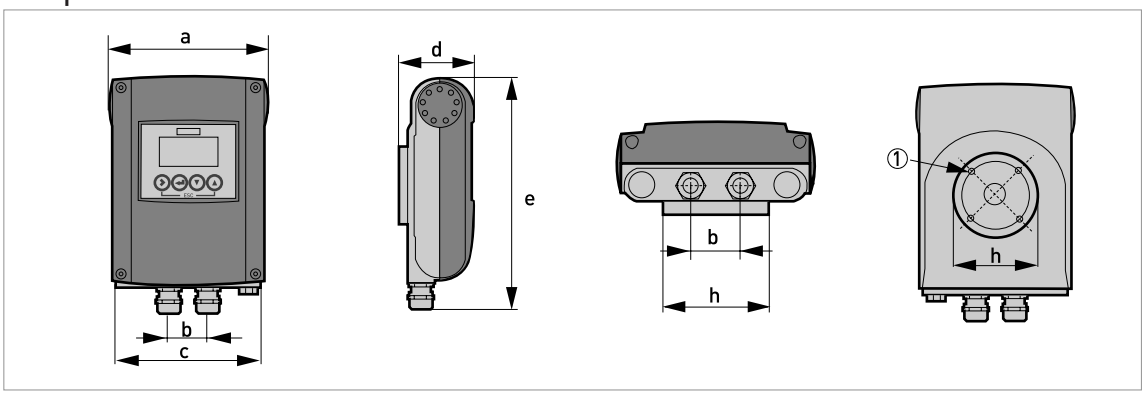

① 4 x M 6

Dimensions and weights in mm and kg

	Dimensions [mm]								Weight [kg]
	a	b	c	d	e	f	g	h	
0° version	161	40	155	81.5	257	-	-	Ø72	Std: 1.9 Ex: 2.4

Dimensions and weights in inches and lb

	Dimensions [inch]								Weight [lb]
	a	b	c	d	e	f	g	h	
0° version	6.34	1.57	6.1	3.21	10.12	-	-	Ø2.83	Std: 4.2 Ex: 5.3

Compact 45° version

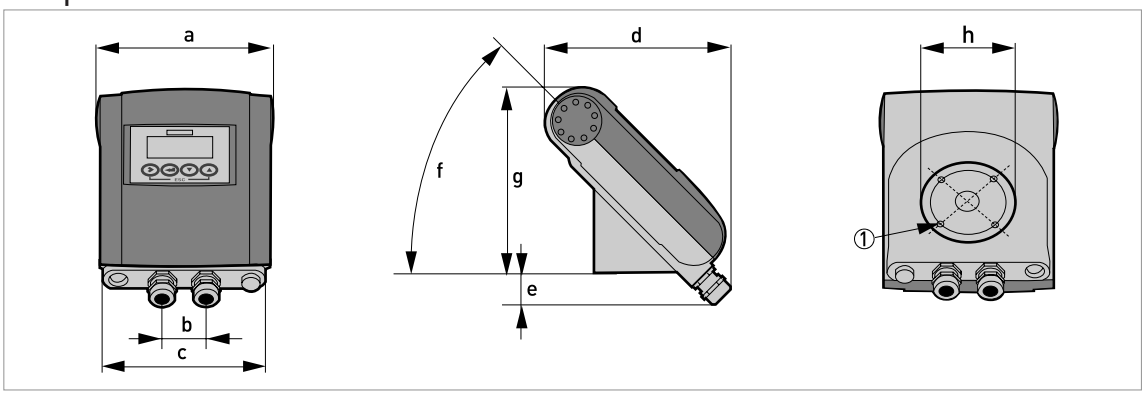

① 4 x M 6

Dimensions and weights in mm and kg

	Dimensions [mm]								Weight [kg]
	a	b	c	d	e	f	g	h	
45° version	161	40	155	184	27.4	45°	186	Ø72	Std: 2.1 Ex: 2.6

Dimensions and weights in inches and lb

	Dimensions [inch]								Weight [lb]
	a	b	c	d	e	f	g	h	
45° version	6.34	1.57	6.10	7.24	1.08	45°	7.32	Ø2.83	Std: 4.6 Ex: 5.7

8.3.2 Mounting plate, wall-mounted version

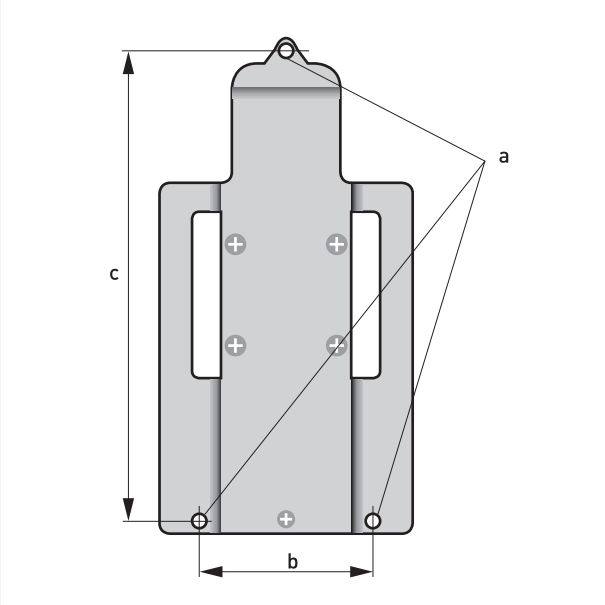

Dimensions in mm and inches

	[mm]	[inches]
a	Ø6.5	Ø0.26
b	87.2	3.4
c	241	9.5

8.4 Flow tables

Flow rate in m/s and m^3/h

	$Q_{100\,\%}$ in m^3/h			
v [m/s]	0.3	1	3	12
DN [mm]	Min. flow	Nominal flow		Max. flow
2.5	0.005	0.02	0.05	0.21
4	0.01	0.05	0.14	0.54
6	0.03	0.10	0.31	1.22
10	0.08	0.28	0.85	3.39
15	0.19	0.64	1.91	7.63
20	0.34	1.13	3.39	13.57
25	0.53	1.77	5.30	21.21
32	0.87	2.90	8.69	34.74
40	1.36	4.52	13.57	54.29
50	2.12	7.07	21.21	84.82
65	3.58	11.95	35.84	143.35
80	5.43	18.10	54.29	217.15
100	8.48	28.27	84.82	339.29
125	13.25	44.18	132.54	530.15
150	19.09	63.62	190.85	763.40
200	33.93	113.10	339.30	1357.20
250	53.01	176.71	530.13	2120.52
300	76.34	254.47	763.41	3053.64
350	103.91	346.36	1039.08	4156.32
400	135.72	452.39	1357.17	5428.68
450	171.77	572.51	1717.65	6870.60
500	212.06	706.86	2120.58	8482.32
600	305.37	1017.90	3053.70	12214.80
700	415.62	1385.40	4156.20	16624.80
800	542.88	1809.60	5428.80	21715.20
900	687.06	2290.20	6870.60	27482.40
1000	848.22	2827.40	8482.20	33928.80
1200	1221.45	3421.20	12214.50	48858.00

Flow rate in ft/s and US gallons/min

	$Q_{100\ \%}$ in US gallons/min			
v [ft/s]	1	3.3	10	40
DN [inches]	Min. flow	Nominal flow		Max. flow
1/10	0.02	0.09	0.23	0.93
1/8	0.06	0.22	0.60	2.39
1/4	0.13	0.44	1.34	5.38
3/8	0.37	1.23	3.73	14.94
1/2	0.84	2.82	8.40	33.61
3/4	1.49	4.98	14.94	59.76
1	2.33	7.79	23.34	93.36
1.25	3.82	12.77	38.24	152.97
1.5	5.98	19.90	59.75	239.02
2	9.34	31.13	93.37	373.47
2.5	15.78	52.61	159.79	631.16
3	23.90	79.69	239.02	956.09
4	37.35	124.47	373.46	1493.84
5	58.35	194.48	583.24	2334.17
6	84.03	279.97	840.29	3361.17
8	149.39	497.92	1493.29	5975.57
10	233.41	777.96	2334.09	9336.37
12	336.12	1120.29	3361.19	13444.77
14	457.59	1525.15	4574.93	18299.73
16	597.54	1991.60	5975.44	23901.76
18	756.26	2520.61	7562.58	30250.34
20	933.86	3112.56	9336.63	37346.53
24	1344.50	4481.22	13445.04	53780.15
28	1829.92	6099.12	18299.20	73196.79
32	2390.23	7966.64	23902.29	95609.15
36	3025.03	10082.42	30250.34	121001.37
40	3734.50	12447.09	37346.00	149384.01
48	5377.88	17924.47	53778.83	215115.30

8.5 Measuring accuracy

Reference conditions

- Medium: water
- Temperature: 20°C / 68°F
- Pressure: 1 bar / 14.5 psi
- Inlet section: ≥ 5 DN

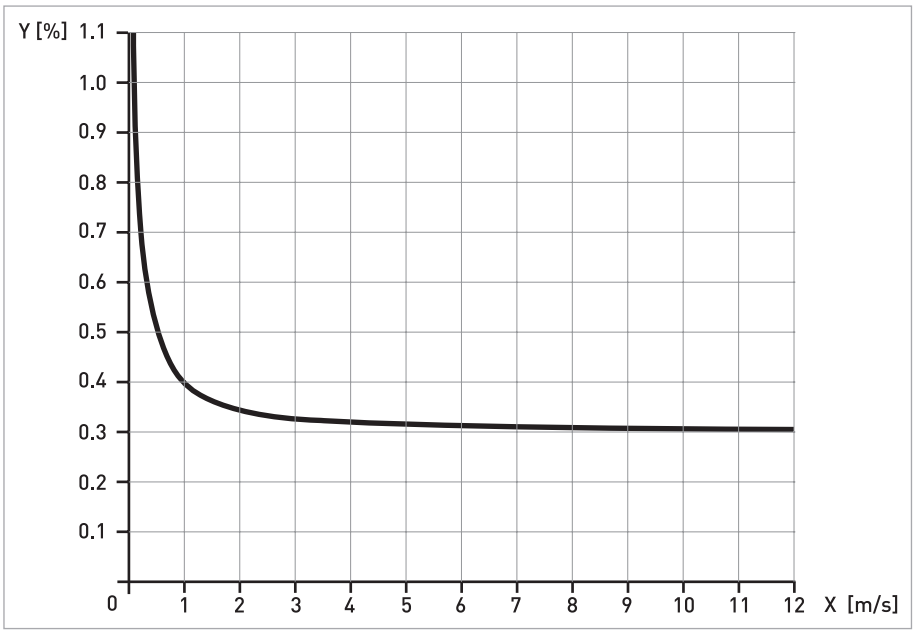

X [m/s]: flow velocity
Y [%]: deviation from the actual measured value (mv)

	DN [mm]	DN [inches]	Accuracy	Curve
VersaFlow Mag 1000 / 2000 / 3000 / 4000 with TWM 1000	10…1200	3/8…48	0.3% of mv + 1 mm/s	①
VersaFlow Mag 100 with TWM 1000	10…150	3/8…6	0.4% of mv + 1 mm/s	as ① + 0.1%
VersaFlow Mag 2000 / 3000 / 4000 with TWM 1000	2.5…6	1/10…1/4		

9.1 General description

The open HART® protocol, which can be used freely, is integrated into the signal converter for communication.

Devices which support the HART® protocol are classified as either operating devices or field devices. When it comes to operating devices (Master), both manual control units (Secondary Master) and PC-supported workstations (Primary Master) are used in, for example, a control centre.

HART® field devices include sensors, converters and actuators. The field devices range from 2-wire to 4-wire to intrinsically safe versions for use in hazardous areas.

The HART® data are superimposed over the analogue 4...20 mA signal via FSK modem. This way, all of the connected devices can communicate digitally with one another via the HART® protocol while simultaneously transferring the analogue signals.

When it comes to the field devices and manual control units, the FSK or HART® modem is integrated. With a PC, however, communication takes place via an external modem which must be connected to the serial interface. There are also other connection variants, as shown in the following connection diagrams.

9.2 Connection variants

The signal converter is a 4-wire device with 4...20 mA current output and HART® interface. Depending on the version, the settings and the wiring, the current output can operate as passive or active output.

- **Multi-Drop Mode is supported**
  In a Multi-Drop communication system, more than 2 devices are connected to a common transmission cable.
- **Burst Mode is not supported**
  In the Burst Mode a slave device transfers cyclic pre-defined response telegrams, to get a higher rate of data transfer.

INFORMATION!
For detailed information about the electrical connection of the signal converter for HART®, see the "Electrical connection" section.

There are two ways of using the HART® communication:

- as Point-to-Point connection and
- as Multi-Drop connection with 2-wire connection or
  as Multi-Drop connection with 3-wire connection.

9.2.1 Point-to-Point connection - analogue / digital mode

Point-to-Point connection between the signal converter and the HART® Master.

The current output of the device may be active or passive.

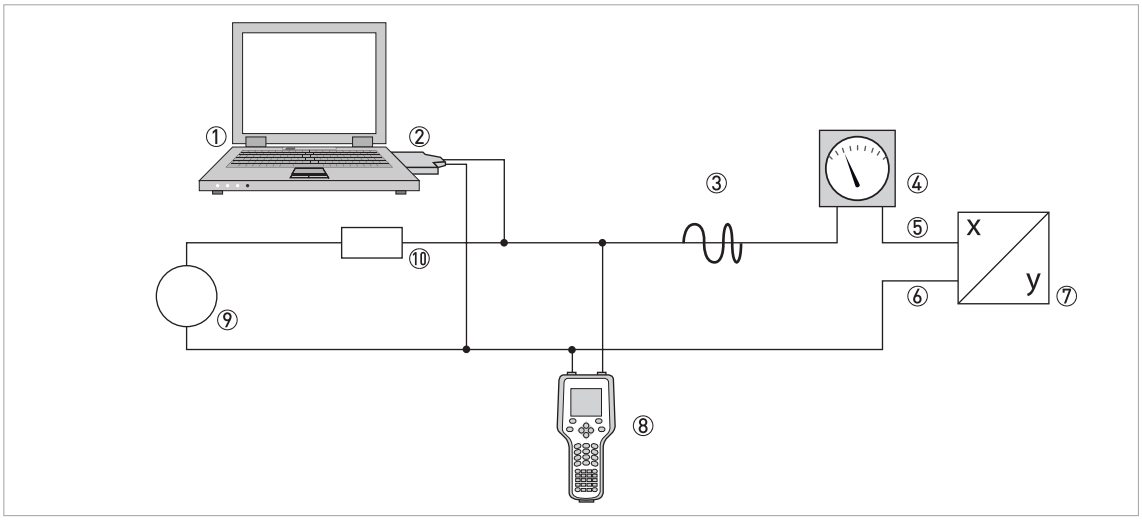

① Primary Master
② FSK modem or HART® modem
③ HART® signal
④ Analogue display
⑤ Signal converter terminals A (C)
⑥ Signal converter terminals A- (C-)
⑦ Signal converter with address = 0 and passive or active current output
⑧ Secondary Master
⑨ Power supply for devices (slaves) with passive current output
①⓪ Load ≥ 250 Ω (Ohm)

9.2.2 Multi-Drop connection (2-wire connection)

In the case of a Multi-Drop connection, up to 15 devices may be installed in parallel (this signal converter and other HART® devices).

The current outputs of the devices must be passive!

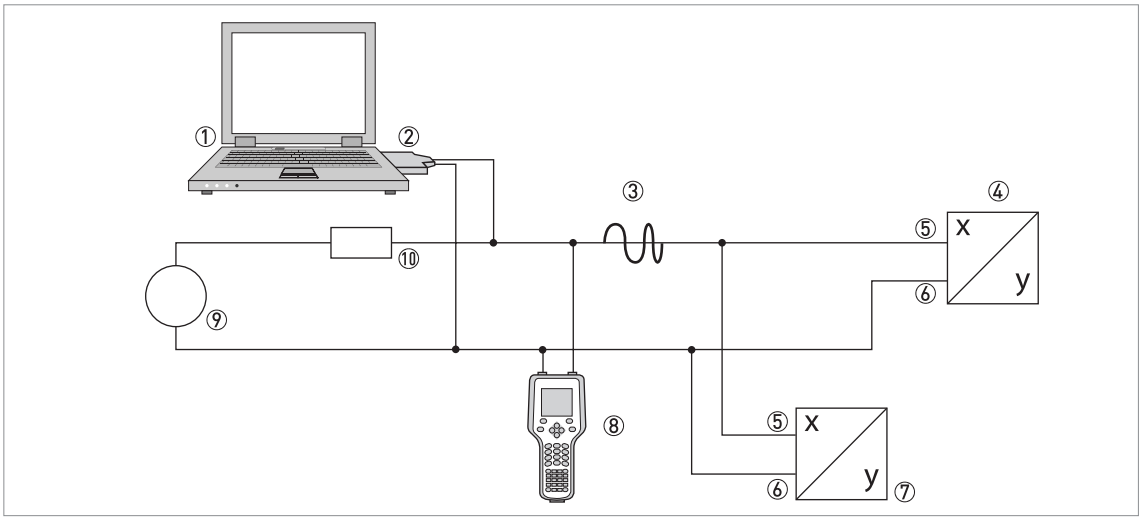

① Primary Master
② HART® modem
③ HART® signal
④ Other HART® devices or this signal converter (see also ⑦)
⑤ Signal converter terminals A (C)
⑥ Signal converter terminals A- (C-)
⑦ Signal converter with address > 0 and passive current output, connection of max. 15 devices (slaves) with 4…20 mA
⑧ Secondary Master
⑨ Power supply
①⓪ Load ≥ 250 Ω (Ohm)

9.2.3 Multi-Drop connection (3-wire connection)

Connection of 2-wire and 4-wire devices in the same network. In order that the current output of the signal converter is working continuously active, an additional third wire must be connected to the devices in the same network. These devices must be powered via a two-wire loop.

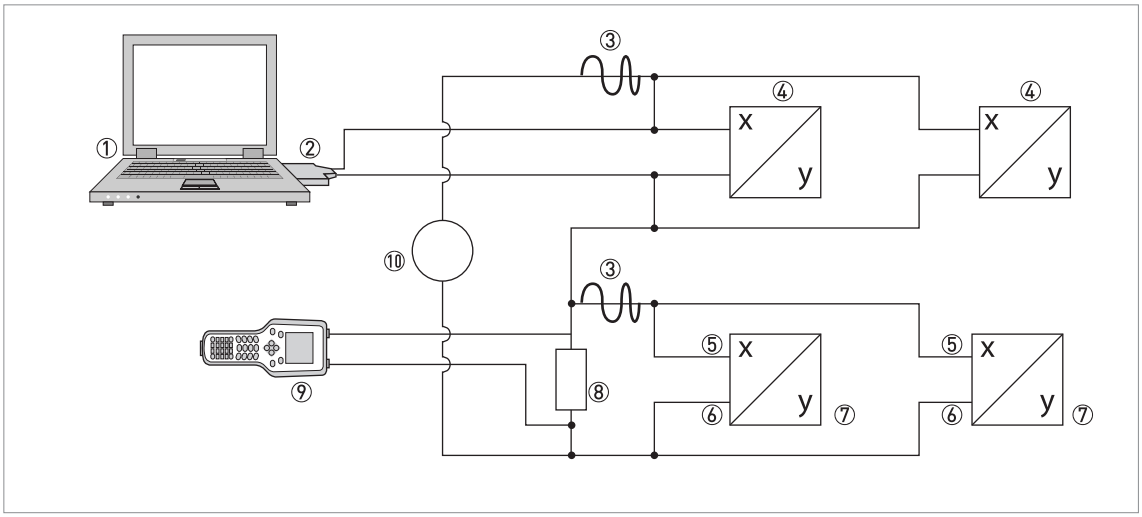

① Primary Master
② HART® modem
③ HART® signal
④ 2-wire external devices (slaves) with 4…20 mA, addresses > 0, powered by current loop
⑤ Signal converter terminals A (C)
⑥ Signal converter terminals A- (C-)
⑦ Connection of active or passive 4-wire devices (slaves) with 4…20 mA, addresses > 0
⑧ Load ≥ 250 Ω (Ohm)
⑨ Secondary Master
①⓪ Power supply

9.3 Outputs and HART® Dynamic variable and device variable

The signal converter is available with various output combinations.

The connection of the terminals A…D to the HART® dynamic variables PV, SV, TV and 4V depends on the device version.

PV = Primary Variable; SV = Secondary Variable; TV = Third Variable; 4V = Fourth Variable

Signal converter version	HART® dynamic variable			
	PV	SV	TV	4V
Basis I/O, terminals	A	D	-	-

The signal converter can provide up to 8 measured values. The measured values are accessible as so-called HART® device variables and can be connected to the HART® dynamic variables. The availability of these variables depends on the device versions and the settings.

Code = device variable code

Device variables

HART® device variable	Code	Type	Explanations
flow speed	20	linear	-
volume flow	21	linear	
mass flow	22	linear	
conductivity	24	linear	
coil temperature	23	linear	
counter 1 (C)	6	totalizer	-
counter 2 (D)	14	totalizer	
diagnosis value	25	linear	Function and availability depends on diagnosis value setting.

For the dynamic variables connected to the linear analogue outputs for current and/or frequency, the assignment of the device variables takes place by selecting the linear measurement for these outputs under the appropriate function of the signal converter. It follows that the dynamic variables connected to current or frequency outputs can only be assigned to the linear HART® device variables.

The HART® dynamic variable PV is always connected to the HART® current output which is, for example, assigned to the volume flow.

A totalizer device variable can thus not be assigned to the dynamic variable PV because the PV is always connected to the HART® current output.

Such correlations do not exist for dynamic variables not connected to linear analogue outputs. Both linear and counter device variables can be assigned.

The totalizer device variables can only be assigned to the dynamic variables SV, TV and 4V if the connected output is not a current or frequency output.

9.4 Parameter for the basic configuration

There are parameters, such as counter 1 or 2, and a selection of the diagnosis values, that require a warm start for the device following data changes in order to update dependent unit parameters, for example, before other parameters are written.

Depending on the characteristic of the HART® host system, e.g. online/offline mode, these parameters are treated differently. See the following section for more detailed information.

9.5 Field Communicator 375/475 (FC 375/475)

The Field Communicator is a hand terminal from Emerson Process Management that is designed to configure HART® and Foundation Fieldbus devices. Device Descriptions (DDs) are used to integrate different devices into the Field Communicator.

9.5.1 Installation

The HART® Device Description for the signal converter must be installed on the Field Communicator. Otherwise only the functions of a generic DD are available to the user and the entire device control is not possible. A "Field Communicator Easy Upgrade Programming Utility" is required to install the DDs on the Field Communicator.

The Field Communicator must be equipped with a system card with "Easy Upgrade Option". For details consult the Field Communicator User's Manual.

9.5.2 Operation

INFORMATION!
For more detailed information see Appendix A, Menu tree for Basic DD.

Operating the signal converter via the Field Communicator is very similar to manual device control using the keyboard.

Limitation: The service menu parameters for the device are not supported and a simulation is only possible for current outputs. The online help for each parameter contains its function number as a reference to the local device display.

Parameter protection for custody transfer is the same as on the device's local display. Other specific protective functions such as the passwords for the quick setup menu and the setup menu are not supported with HART®.

The Field Communicator always saves a complete configuration for the exchange with AMS, see Appendix A. However, in the offline configuration and when sending to the device, the Field Communicator only takes into account a partial parameter set (like the standard configuration of the old HART® Communicator 275).

9.5.3 Parameter for the basic configuration

In online mode, counter measurements and the diagnosis value can be set using special methods, see Appendix A. In offline mode, these parameters are read-only. However, when transferring the offline configuration, this data is also written to the device.

9.6 Asset Management Solutions (AMS)

The Asset Management Solutions Device Manager (AMS) is a PC program from Emerson Process Management which is designed to configure and manage HART®, PROFIBUS and Foundation-Fieldbus devices. Device Descriptions (DDs) are used to integrate different devices into the AMS.

9.6.1 Installation

Please read the “readme.txt”, which is also contained in the Installation Kit.

If the signal converter Device Description has not yet been installed on the AMS system, a so-called Installation Kit HART® AMS is required. It is available for download from the website or on CD ROM.

For installation with the Installation Kit refer to the "AMS Intelligent Device Manager Books Online" section "Basic AMS Functionality /Device Configurations / Installing Device Types / Procedures /Install device types from media".

9.6.2 Operation

INFORMATION!
For more detailed information see Appendix B, Menu tree for AMS.

9.6.3 Parameter for the basic configuration

Due to AMS requirements and conventions, there are differences when operating the signal converter with AMS and operating using the local keyboard. The service menu parameters are not supported and simulation is only possible for current outputs. The online help for each parameter contains its function number as a reference to the local device display.

Parameter protection for custody transfer is the same as on the device's local display. Other specific protective functions such as the passwords for the quick setup menu and the setup menu are not supported with HART®.

In online mode, the measurements for counters and diagnosis values can be changed by using the appropriate methods in the basic configuration menu. These parameters are read-only in offline mode.

9.7 Field Device Manager (FDM)

A Field Device Manager (FDM) is basically a PC program from Honeywell used to configure HART®, PROFIBUS and Foundation Fieldbus devices. Device Descriptions (DDs) are used to integrate different devices into the FDM.

9.7.1 Installation

If the signal converter Device Description has not yet been installed on the FDM system, the Device Description is required in binary format and is available for download from the website or on CD ROM.

See the section regarding Managing DDs in the FDM User Guide for information on installing the Device Descriptions in binary format.

9.7.2 Operation

INFORMATION!
For more detailed information see Appendix A, Menu tree for Basic DD.

Operating the signal converter via the Field Device Manager is very similar to manual device control using the keyboard.

Limitation: The Service Menu parameters for the device are not supported and a simulation is only possible for current outputs. The online help for each parameter contains its function number as a reference to the local device display.

Parameter protection for custody transfer is the same as on the device's local display. Other specific protective functions such as the passwords for the quick setup menu and the setup menu are not supported with HART®.

9.8 Process Device Manager (PDM)

The Process Device Manager (PDM) is a Siemens PC program designed to configure HART® and PROFIBUS devices. Device Descriptions (DDs) are used to integrate different devices into the PDM.

9.8.1 Installation

If the signal converter Device Description has not yet been installed on the PDM system, a so-called Device Install HART® PDM is required for the signal converter. This is available for download from the website or on CD-ROM / floppy disk.

For installation under PDM V 5.2, see PDM manual, section 11.1 - Install device / Integrate device into SIMATIC PDM with Device Install.

For installation under PDM V 6.0, see PDM manual, Section 13 - Integrating devices.

Please also read the “readme.txt”, which is also contained in the Installation Kit.

9.8.2 Operation

INFORMATION!
For more detailed information see Appendix C, Menu tree for PDM.

Due to PDM requirements and conventions, there are differences when operating the signal converter with PDM and operating using the local keyboard. Service menu parameters are not supported and a simulation is only possible for current outputs. The online help for each parameter contains its function number as a reference to the device's local display.

Parameter protection for custody transfer is the same as on the device's local display. Other specific protective functions such as the passwords for the quick setup menu and the setup menu are not supported with HART®.

9.8.3 Parameter for the basic configuration

The counter measurements and the diagnosis values can be set directly in the PDM offline table. The dependent unit parameters are automatically updated. However, automatic updating is not possible in online dialogues of the PDM parameter table.

9.9 Field Device Tool / Device Type Manager (FDT / DTM)

A Field Device Tool Container (FDT Container) is basically a PC program used to configure HART®, PROFIBUS and Foundation Fieldbus devices. To adapt to different devices, an FDT container uses a so-called Device Type Manager (DTM).

9.9.1 Installation

If the Device Type Manager for the signal converter has not yet been installed on the Field Device Tool Container, setup is required and is available for download from the website or on CD-ROM. See the supplied documentation for information on how to install and set up the DTM.

9.9.2 Operation

Operating the signal converter via DTM is very similar to manual device control using the keyboard. See also local device display.

9.10 Appendix A: HART® menu tree for Basic-DD

INFORMATION!
The numbering in the following table may change depending on the version of the signal converter!

Abbreviations of the following tables:

- Opt Optional, depending on device version and configuration
- Rd Read only
- Cust Custody lock protection
- Loc Local, affects only DD host views

9.10.1 Overview Basic-DD menu tree (positions in menu tree)

1 dynam. variable	1 measured values	
	2 IO (Inputs/Outputs)	
2 quick setup	1 language	
	2 tag	
	3 reset	
	4 analogue outputs	
	5 digital outputs	
3 test	1 simulation	
	2 information	
4 setup	1 process input	1 calibration
		2 filter
		3 self test
		4 information
		5 sensor limits
	2 I/O	1 hardware
		2 (terminals) A
		3 (terminals) C
		4 (terminals) D
	3 I/O counter	1 counter 1
		2 counter 2
	4 I/O HART	1 PV is Rd
		2 SV is
		3 TV is
		4 4V is
		5 D/A trim
		6 apply values
		7 HART units
	5 device	1 device info
		2 display
		3 1. meas. page
		4 2. meas. page
		5 graphic page
		6 special functions
		7 units (device)
		8 HART

9.10.2 Basic-DD menu tree (details for settings)

1 dynam. variable

1 measured values	1 volume flow / 2 mass flow / 3 flow speed / / 4 conductivity / 5 coil temperature / 6 counter 1 ^{Opt} / 7 counter 2 ^{Opt} / 8 diagnosis value ^{Opt}
2 Inputs/Outputs	1 A ^{Opt} / 2 % range A ^{Opt} / 3 D ^{Opt} / 4 % range D ^{Opt}

2 quick setup

1 language	-
2 tag	-
3 reset	1 reset errors / 2 reset counter 1 ^{Cust} / 3 reset counter 2 ^{Cust}
4 analogue outputs	1 measurement A ^{Cust} / 2 unit ^{Cust} / 3 range min A ^{Cust} / 4 range max A ^{Cust} / 5 lfc threshold ^{Cust} / 6 lfc hysteresis ^{Cust} / 7 time constant ^{Cust}
5 digital outputs	1 measurement D $^{Opt, Cust}$ / 2 pulse value unit $^{Opt, Cust}$ / 3 value p. pulse D $^{Opt, Cust}$ / 4 lfc threshold $^{Opt, Cust}$ / 5 lfc hysteresis $^{Opt, Cust}$

3 test

1 simulation	1 simul. current A ^{Opt} / 2 simul. frequency D ^{Opt}
2 information	1 C number / 2 info process input / 3 SW.REV.MS / 4 SW.REV.UIS

4 setup

1 process input	1 calibration	1 autom. zero calib. ^{Cust} / 2 zero calibration ^{Cust} / 3 size ^{Cust} / 4 GKL $^{Opt, Cust}$ / 5 coil resistance Rsp ^{Cust} / 6 density ^{Cust} / 7 target conduct. ^{Cust} / 8 EF electr. factor ^{Cust} / 9 field frequency ^{Cust} / 10 select settling ^{Cust} / 11 settling time $^{Opt\ Cust}$ / 12 line frequency ^{Cust}
	2 filter	1 limitation min ^{Cust} / 2 limitation max ^{Cust} / 3 flow direction ^{Cust} / 4 time constant / 5 pulse filter ^{Cust} / 6 pulse width $^{Opt, Cust}$ / 7 pulse limitation $^{Opt, Cust}$ / 8 noise filter ^{Cust} / 9 noise level $^{Opt, Cust}$ / 10 noise suppression $^{Opt, Cust}$ / 11 lfc threshold ^{Cust} / 12 lfc hysteresis ^{Cust}
	3 self test	1 empty pipe ^{Cust} / 2 limit empty pipe $^{Opt, Cust}$ / 3 electrode noise ^{Cust} / 4 limit electr. noise $^{Opt, Cust}$ / 5 settling of field ^{Cust} / 6 diagnosis value Rd / 7 select diagnosis

	4 information	1 liner / 2 electr. material / 3 serial no. sensor Rd / 4 V no. sensor Rd / 5 sensor electr. info	
	5 sensor limits	1 volume flow	1 upper snsr limit Rd / 2 lower snsr limit Rd / 3 minimum span Rd
		2 mass flow	
		3 flow speed	
		4 conductivity	
		5 coil temperature	
2 I/O	1 hardware	1 terminals A Cust / 2 terminals C Cust / 3 terminals D Cust	
	2 A 3 C 4 D	**current output Opt**: 1 range 0% Cust / 2 range 100% Cust / 3 extended range min Cust / 4 extended range max Cust / 5 error current Cust / 6 error condition Cust / 7 measurement Cust / 8 range min Cust / 9 range max Cust / 10 polarity Cust / 11 limitation min Cust / 12 limitation max Cust / 13 lfc threshold Cust / 14 lfc hysteresis Cust / 15 time constant Cust / 16 special function Cust / 17 rc threshold Opt, Cust / 18 rc hysteresis Opt, Cust / 19 information	
		frequency output Opt: 1 pulse shape Cust / 2 pulse width Cust / 3 100% pulse rate Cust / 4 measurement Cust / 5 range min Cust / 6 range max Cust / 7 polarity Cust / 8 limitation min Cust / 9 limitation max Cust / 10 lfc threshold Cust / 11 lfc hysteresis Cust / 12 time constant Cust / 13 invert signal Cust / 14 special function Opt, Cust / 15 information	
		pulse output Opt: 1 pulse shape Cust / 2 pulse width Cust / 3 max. pulse rate Cust / 4 measurement Cust / 5 pulse value unit / 6 value p. pulse / 7 polarity Cust / 8 lfc threshold Cust / 9 lfc hysteresis Cust / 10 time constant / 11 invert signal Cust / 12 special function Opt, Cust / 13 information	
		status output Opt: 1 mode / 2 output A Opt / 2 output C Opt / 2 output D Opt / 3 invert signal / 4 information	
		limit switch Opt: 1 measurement / 2 threshold / 3 hysteresis / 4 polarity / 5 time constant / 6 invert signal / 7 information	
3 I/O counter	1 counter 1	1 funct. of counter Cust / 2 measurement Cust, Rd / 3 select measurement Opt, Cust / 4 lfc threshold Opt, Cust / 5 lfc hysteresis Opt, Cust / 6 time constant Opt, Cust / 7 preset value Opt, Cust / 8 reset counter Opt, Cust / 9 set counter Opt, Cust / 10 information	
	2 counter 2		
4 I/O HART	1 PV is Rd / 2 SV is / 3 TV is / 4 4V is / 5 D/A trim Cust / 6 apply values Cust / 7 HART units		

5 device	1 device info	1 tag / 2 C number Rd / 3 device serial no. Rd / 4 electronic serial no. Rd / 5 SW.REV.MS / 6 circuit board info	
	2 display	1 language / 2 default display Cust / 3 SW.REV.UIS	
	3 1. meas. page 4 2. meas. page	1 function Cust / 2 measurement 1.line Cust / 3 range min Cust / 4 range max Cust / 5 limitation min / 6 limitation max / 7 lfc threshold / 8 lfc hysteresis / 9 time constant / 10 format 1.line / 11 measurement 2.line Cust / 12 format 2.line Cust / 13 measurement 3.line Cust / 14 format 3.line Cust	
	5 graphic page	1 select range / 2 range centre / 3 range +/- / 4 time scale	
	6 special functions	1 list errors / 2 reset errors / 3 warmstart	
	7 units (device)	1 volume flow Cust / 2 mass flow Cust / 3 flow speed Cust / 4 conductivity Cust / 5 temperature Cust / 6 volume Cust / 7 mass Cust / 8 density Cust	
	8 HART	1 address	
		2 message	
		3 description	
		4 units (HART)	1 volume flow
		5 formats (HART)	2 mass flow
			3 flow speed
			4 conductivity
			5 temperature
			6 counter 1
			7 counter 2
			8 diagnosis value
		6 device info	1 manufacturer Rd
			2 model Rd
			3 device ID Rd
			4 tag
			5 date
			6 write protect Rd
			7 final assembly no.
			8 sensor serial no.
			9 revision no. 1 universal rev. Rd 2 device rev. Rd 3 software rev. Rd 4 hardware rev. Rd
		7 preambles	1 request preams Rd
			2 response preams
		8 master reset	
		9 prepare download	

9.11 Appendix B: HART® menu tree for AMS

Abbreviations of the following tables:

- Opt Optional, depending on device version and configuration
- Rd Read only
- Cust Custody lock protection
- Loc Local AMS, affects only AMS views

9.11.1 Overview AMS menu tree (positions in menu tree)

Configure	quick setup	
	sensor	
	input calibration	
	input filter	
	self test / info	
	I/O terminals A/C/D	current output
		frequency output
		pulse output
		status output
		limit switch
	counter	counter 1
		counter 2
	device	
	1. meas. page / graphic page / 2. meas. page	
	HART	
	HART units	
Compare		
Clear Offline		
Status	Overview	
	Failure (device)	
	Failure (application)	
	Out of specification	
	Check request & Information	
Process Variables	process values	
	counter	
	outputs	
	device	
	HART	
Scan Device		
Calibration Management		
Diagnostics and Test		
Calibrate		

Reset
Basic Configuration
Rename
Unassign
Assign / Replace
Audit Trail
Record Manual Event
Drawings / Notes
Help...

9.11.2 AMS menu tree (details for settings)

Configure

quick setup	device	language / tag	
	current output A	measurement A ^{Cust} / unit A ^{Cust} / time constant A ^{Cust} / range max A ^{Cust} / range min A ^{Cust} / lfc threshold ^{Cust} / lfc hysteresis ^{Cust}	
	pulse output D	measurement D $^{Opt, Cust}$ / pulse value unit $^{Opt, Cust}$ / value p. pulse $^{Opt, Cust}$ / lfc threshold $^{Opt, Cust}$ / lfc hysteresis $^{Opt, Cust}$	
sensor	limits for...	volume flow	upper snsr limit Rd / lower snsr limit Rd / minimum span Rd
		mass flow	
		flow speed	
		conductivity	
		coil temperature	
input calibration	zero calibration ^{Cust} / size^{Cust} / GKL $^{Opt, Cust}$ / coil resistance Rsp ^{Cust} / density ^{Cust} / target conductivity ^{Cust} / EF electr. factor ^{Cust} / field frequency ^{Cust} / select settling ^{Cust} / settling time $^{Opt, Cust}$ / line frequency ^{Cust}		
input filter	limitation min ^{Cust} / limitation max ^{Cust} / flow direction ^{Cust} / time constant / pulse filter ^{Cust} / pulse width ^{Cust} / pulse limitation ^{Cust} / noise filter ^{Cust} / noise level ^{Cust} / noise suppression $^{Opt, Cust}$ / lfc threshold ^{Cust} / lfc hysteresis ^{Cust}		
self test / info	self test	empty pipe ^{Cust} / limit empty pipe $^{Opt, Cust}$ / electrode noise ^{Cust} / limit electr. noise $^{Opt, Cust}$ / settling of field ^{Cust} / diagnosis value Rd	
	information	liner / electr. material / serial no. sensor Rd / V no. sensor Rd /	

I/O terminals A/C/D	current output Opt	range 0% Cust / range 100% Cust / extended range min Cust / extended range max Cust / error current Cust / error condition Cust / measurement Cust / range min Cust / range max Cust / polarity Cust / limitation min Cust / limitation max Cust / lfc threshold Cust / lfc hysteresis Cust / time constant Cust / special function Cust / rc threshold Opt, Cust / rc hysteresis Opt, Cust
	frequency output Opt	pulse shape Cust / pulse width Cust / 100% pulse rate Cust / measurement Cust / range min Cust / range max Cust / polarity Cust / limitation min Cust / limitation max Cust / lfc threshold Cust / lfc hysteresis Cust / time constant / invert signal Cust / special function Opt, Cust
	pulse output Opt	pulse shape Cust / pulse width Cust / max. pulse rate Cust / measurement Cust / pulse value unit / value p. pulse / polarity Cust / lfc threshold Cust / lfc hysteresis Cust / time constant / invert signal Cust / special function Opt, Cust
	status output Opt	mode Cust / output A Opt / output C Opt / output D Opt / invert signal
	limit switch Opt	measurement Cust / threshold / hysteresis / polarity / time constant / invert signal
counter	counter 1	function Cust / measurement Opt, Cust / lfc threshold Opt, Cust / lfc hysteresis Opt, Cust / time constant Opt, Cust / preset value Opt, Cust
	counter 2	
device	device info	tag / C number Rd / device serial no. Rd / electronic serial no. Rd
	display	language / default display Cust
	units	volume flow Cust / mass flow Cust / flow speed Cust / conductivity Cust / temperature Cust / volume Cust / mass Cust / density Cust
1. and 2. meas. page graphic page	1. and 2. meas. page	function Cust / measurement 1.line Cust / range min Cust / range max Cust / limitation min / limitation max / lfc threshold / lfc hysteresis / time constant / format 1.line / measurement 2.line Cust / format 2.line Cust / measurement 3.line Cust / format 3.line Cust
	graphic page	select range / range centre / range +/- / time scale

HART	identification	manufacturer Rd / model Rd / device ID Rd / address / tag / date / message / description / write protect Rd / final assembly no. / sensor serial no.
	revision numbers	universal rev. Rd / device rev. Rd / software rev. Rd / hardware rev. Rd
	preambles	request preams Rd / response preams
	dynamic variables	PV is Rd / SV is / TV is / 4V is
HART units	display formats	volume flow Loc / mass flow Loc / flow speed Loc / conductivity Loc / temperature Loc / counter 1 Loc / counter 2 Loc / diagnosis value Opt, Loc
	units	volume flow / mass flow / flow speed / conductivity / temperature / counter 1 / counter 2 /

Compare and Clear Offline

Status

Overview	Standard	Primary variable out of limits
		Non-primary variable out of limits
		Primary variable analogue output saturated
		Primary variable analogue output fixed
		Cold start
		Field device malfunction
		Configuration changed
Failure (device)	F error in device / F IO1 / F parameter / F configuration / F display / F sensor electronic / F sensor global / F sensor local / F field current local / F current output A / F software user interface / F hardware settings / F hardware detection / F RAM/ROM error IO1	
Failure (application)	F application error / F empty pipe / F flow rate too high / F field frequency too high / F DC offset / F open circuit A / F over range A (current) / F over range D (pulse) / F active settings / F factory settings / F backup 1 settings / F backup 2 settings	
Out of specification	S out of specification / S pipe not full / S pipe empty / S linearity / S flow profile / S electrode noise / S gain error / S electrode symmetry / S field coil broken / S field coil bridged / S field current deviation / S field frequency too high / S electronic temperature / S coil temperature / S overflow counter 1 / S overflow counter 2 / S Backplane Invalid	
Check request & Information	check request	C checks in progress / C test sensor
	information	I counter 1 stopped / I counter 2 stopped / I power fail / I over range display 1 / I over range display 2 / I backplane sensor / I backplane settings / I backplane difference / I optical interface

Process Variables

process values	volume flow / mass flow / flow speed / conductivity / coil temperature / diagnosis value [Opt]
counter	counter 1 [Opt] / counter 2 [Opt]
outputs	A [Opt] / % range A [Opt] / D [Opt] / % range D [Opt]
device	tag [Rd] / description [Rd]
HART	polling address [Rd] / device ID [Rd]

Scan Device

Calibration Management

Diagnostics and Test

	simulation A [Opt, Cust] / simulation D [Opt, Cust] / circuit board info

Calibrate

	autom. zero calibration [Cust] / D/A trim [Cust] / apply values [Cust]

Reset

	reset errors / reset configuration changed flag / master reset / warmstart / reset counter 1[Cust] / set counter 1 [Cust] / reset counter 2 [Cust] / set counter 2 [Cust]

Basic Configuration

	select measurement counter 1 / select measurement counter 2 / select diagnosis value

Rename

Unassign

Assign / Replace

Audit Trail

Record Manual Event

Drawings / Notes

Help…

9.12 Appendix C: HART® menu tree for PDM

Abbreviations of the following tables:

- Opt Optional, depending on device version and configuration
- Rd Read only
- Cust Custody lock protection
- Loc Local PDM, affects only PDM views

9.12.1 Overview PDM menu tree (positions in menu tree)

Overview: Menu Device

Communication Path
Load To Device
Load To PG/PC
Set Address
Test
Reset
Calibration
HART

Overview: Menu View

Display	Display
	Totalizer
Yt diagram	
Outputs	Current output A Opt
	Frequency output D Opt
Device Status	Device
	HART
	Standard (overview)
	Failure (device)
	Failure (application)
	Out of specification
	Check request
	Information
Circuit board info	
Toolbar	
Status Bar	
Update	

Overview: PDM parameter table

Identification	operation unit	
	device	
Input	calibration	
	filter	
	self test	
	information	
	measuring limits	volume flow
		mass flow
		flow speed
		conductivity
		coil temperature
I/O	A Opt	
	C Opt	
	D Opt	
	counter 1	
	counter 2	
Human machine interface	local display	1. and 2. meas. page
		graphic page
	units (device)	
	units (HART)	
	formats (HART)	

9.12.2 PDM menu tree (details for settings)

Menu Device

Communication Path		
Load To Device		
Load To PG/PC		
Set Address		
Test	simulation current output A Opt, Cust	
	simulation frequency output D Opt, Cust	
Reset	<reset errors>	
	<reset configuration changed flag>	
	<master reset>	
	<warmstart>	
	<reset counter 1> Cust	
	<set counter 1> Cust	
	<reset counter 2> Cust	
	<set counter 2> Cust	
Calibration	autom. zero calibration Cust	
	D/A trim Cust	
	apply values Cust	
HART	preambles	request preams Rd / response preams
	dynamic variables settings	PV is Rd / SV is / TV is / 4V is

Menu View

Display	volume flow / mass flow / flow speed / conductivity / coil temperature / diagnosis value / device status		
Counter	counter 1 Opt / counter 2 Opt		
Yt diagram	volume flow / mass flow		
Outputs	current output A Opt		measured value Opt / A Opt / % range A Opt
	frequency output D Opt		measured value Opt / D Opt / % range D Opt
Device Status	device	C number Rd / device serial no. Rd / electronic serial no. Rd	
	HART	tag / manufacturer Rd / write protect Rd / model Rd / device ID / universal rev. Rd / device rev. Rd / software rev. Rd / hardware rev. Rd / date Rd / final assembly no. Rd / sensor serial no. Rd	
	Standard (overview)	Primary variable out of limits	
		Non-primary variable out of limits	
		Primary variable analogue output saturated	
		Primary variable analogue output fixed	
		Cold start	
		Configuration changed	
		Field device malfunction	
	Failure (device)	F error in device / F IO1 / F parameter / F configuration / F display / F sensor electronic / F sensor global / F sensor local / F field current local / F current output A / F software user interface / F hardware settings / F hardware detection / F RAM/ROM error IO1	
	Failure (application)	F application error / F empty pipe / F flow rate too high / F field frequency too high / F DC offset / F open circuit A / F over range A (current) / F over range D (pulse) / F active settings / F factory settings / F backup 1 settings / F backup 2 settings	
	Out of specification	S out of specification / S pipe not full / S pipe empty / S linearity / S flow profile / S electrode noise / S gain error / S electrode symmetry / S field coil broken / S field coil bridged / S field current deviation / S field frequency too high / S electronic temperature / S coil temperature / S overflow counter 1 / S overflow counter 2 / S Backplane Invalid	
	check request	C checks in progress / C test sensor	
	information	I counter 1 stopped / I counter 2 stopped / I power fail / I over range display 1 / I over range display 2 / I backplane sensor / I backplane settings / I backplane difference / I optical interface	

Circuit board info

Toolbar

Status Bar

Update

PDM parameter table

identification

operation unit	tag / description / message
device	C number Rd / device serial no. Rd / electronic serial no. Rd / manufacturer Rd / model Rd / device ID Rd / universal rev. Rd / device rev. Rd / software rev. Rd / hardware rev. Rd / date / final assembly no. / sensor serial no.

input

calibration	zero calibration Cust / size Cust / GKL Opt, Cust / density Cust / target conductivity Cust / EF electr. factor Cust / field frequency Cust / select settling Cust / settling time Opt, Cust / line frequency Cust	
filter	limitation min Cust / limitation max Cust / flow direction Cust / time constant / pulse filter Cust / pulse width Opt, Cust / pulse limitation Opt, Cust / noise filter Cust / noise level Opt, Cust / noise suppression Opt, Cust / lfc threshold Cust / lfc hysteresis Cust	
self test	empty pipe Cust / limit empty pipe Opt, Cust / electrode noise Cust / limit electr.noise Opt, Cust / settling of field Cust / diagnosis value	
information	liner / electr. material / serial no. sensor Rd / V no. sensor Rd	
Measuring limits for ...	... volume flow	upper sensr limit Rd / lower sensr limit Rd / minimum span Rd
	... mass flow	
	... flow speed	
	... conductivity	
	... coil temperature	

I/O

I/O	terminals A ^{Cust} / terminals C ^{Cust} / terminals D ^{Cust}		
A / C / D ^{Opt}	current output ^{Opt}	range 0% ^{Cust} / range 100% ^{Cust} / extended range min ^{Cust} / extended range max ^{Cust} / error current ^{Cust} / error condition ^{Cust} / measurement ^{Cust} / range min ^{Cust} / range max ^{Cust} / polarity ^{Cust} / limitation min ^{Cust} / limitation max ^{Cust} / lfc threshold ^{Cust} / lfc hysteresis ^{Cust} / time constant / special function ^{Cust} / rc threshold $^{Opt, Cust}$ / rc hysteresis $^{Opt, Cust}$	
	frequency output ^{Opt}	pulse shape ^{Cust} / pulse width ^{Cust} / 100% pulse rate ^{Cust} / measurement ^{Cust} / range min ^{Cust} / range max ^{Cust} / polarity ^{Cust} / limitation min ^{Cust} / limitation max ^{Cust} / lfc threshold ^{Cust} / lfc hysteresis ^{Cust} / time constant / invert signal ^{Cust} / special function $^{Opt, Cust}$	
	pulse output ^{Opt}	pulse shape ^{Cust} / pulse width ^{Cust} / max pulse rate ^{Cust} / measurement ^{Cust} / pulse value unit / value p. pulse / polarity ^{Cust} / lfc threshold ^{Cust} / lfc hysteresis ^{Cust} / time constant / invert signal ^{Cust} / special function $^{Opt, Cust}$	
	status output ^{Opt}	mode / output A ^{Opt} / output C ^{Opt} / output D ^{Opt} / invert signal	
	limit switch ^{Opt}	measurement / threshold / hysteresis / polarity time constant / invert signal	
	counter	counter 1	function ^{Cust} / measurement ^{Opt} / lfc threshold ^{Cust} / lfc hysteresis ^{Cust} / time constant ^{Opt} / preset value ^{Opt}
		counter 2	

Human machine interface

local display	language / default display ^{Opt}	
1. and 2. meas. page	function ^{Cust} / measurement 1.line ^{Cust} / range min ^{Cust} / range max ^{Cust} / limitation min / limitation max / lfc threshold / lfc hysteresis / time constant / format 1.line / measurement 2.line ^{Cust} / format 2.line ^{Cust} / measurement 3.line ^{Cust} / format 3.line ^{Cust}	
graphic page	select range / range centre / range +/- / time scale	
units (device)	unit for ...	volume flow ^{Cust} / mass flow ^{Cust} / flow speed / conductivity / temperature / volume ^{Cust} / mass ^{Cust} / density ^{Cust}
units (HART)	unit for ...	volume flow / mass flow / flow speed / conductivity / coil temperature / counter 1 / counter 2
formats (HART)	format for ...	volume flow ^{Loc} / mass flow ^{Loc} / flow speed ^{Loc} / conductivity ^{Loc} / coil temperature ^{Loc} / counter 1 ^{Loc} / counter 2 ^{Loc} / diagnosis value $^{Opt, Loc}$

DIAMOND PARTNER

Honeywell

AUTHORIZED DISTRIBUTOR

De Gidts & Feldman BV
The Netherlands
www.dgfg.nl

De Gidts & Feldman

INSTRUMENTATION & FILTRATION

Honeywell Field Solutions
512 Virgina Drive
Fort Washington, PA 19034
www.honeywell.com/ps

© Honeywell International Inc.
Subject to change without notice.