AMETEK®
DREXELBROOK

Leader in
Level Measurement

Installation and Operating Instructions

IntelliPoint RF™ RMT Series
Two-Wire Point Level Switch
with Manual Calibration/Set Point

International: +1 215-674-1234
Fax: +1 215-674-2731
E-mail: drexelbrook.sales@ametek.com
Website: www.drexelbrook.com

AMETEK Drexelbrook makes no warranty of any kind with regard to the material contained in this manual, including, but not limited to, implied warranties or fitness for a particular purpose. Drexelbrook shall not be liable for errors contained herein or for incidental or consequential damages in connection with the performance or use of material.

© AMETEK Drexelbrook

RMTXX1-LM
Issue #15

IntelliPoint RF™ RMT Series Two-Wire Point Level Switch with Manual Calibration/Set Point

AMETEK®
DREXELBROOK
An ISO 9001 Certified Company

205 Keith Valley Road, Horsham, PA 19044
Telephone: +1 215-674-1234
Fax: +1 215-674-2731
E-mail: drexelbrook.info@ametek.com
Website: www.drexelbrook.com

Contents

Contents

Section 1: Introduction
1.1 System Description 1
1.2 Technology 1
1.3 Model Number 2
1.4 Sensing Element List 3
1.5 Dual Compartment Housing 4

Section 2: Installation
2.1 Unpacking 5
2.2 Mounting and Installation Guidelines 5
2.3 Installation of Flush-Mounted Sensing Elements 7
2.4 Input Wiring 8
2.5 Spark Protection 8
2.6 Circuit Board 9
2.7 Output and LED Status 11
2.8 Sensing Element Connection 12

Section 3: Calibration
3.1 Setpoint Control 15
3.2 Adjustable Differential Controls 16
3.3 Calibration Procedures 17

Section 4: Spare Parts List 23

Section 5: Troubleshooting
5.1 RF Point Level Troubleshooting Guide 25
5.2 Testing the Electronic Unit 26
5.3 Testing the Relay Circuits 27
5.4 Testing the Sensing Element 28
5.5 Testing the Integral Cable 31
5.6 Testing Power Supply 31
5.7 Factory Assistance 32
5.8 Field Service 32
5.9 Customer Training 32
5.10 Equipment Return 33

Section 6: Specifications
6.1 Approval Available 35

Section 7: Drawings / Certificates
7.1 FM Control Drawings 37
7.2 ATEX Control Drawings 53
7.3 CE Declaration of Conformity 62
7.4 ATEX Control Drawings 63
7.5 Mounting and Wiring for Spark Protector Drawings 72
7.6 Adding a Padded Capacitor 75
7.7 Dual Seal Assembly for 700 Series Sensing Elements 78

Appendix A:
Shortening or Lengthening the Sensing Element A-1
CE Installation Supplement A-2
CE Installation Supplement (Continued) A-3

Section 1

Section 1: Introduction

1.1 System Description

The AMETEK Drexelbrook, **IntelliPoint RMT and RGT Series** point level switches detect the presence or absence of material and provide a current output for control functions. The RMT and RGT IntelliPoint™ switches are calibrated through a simple potentiometer adjustment.

1.2 Technology

In a simple capacitance probe-type sensing element, when the level rises and material covers the probe, the capacitance within the circuit between the probe and the media (conductive applications), or the probe and the vessel wall (insulating applications), increases. This is due to the dielectric constant (k) of the material which causes a bridge imbalance. The signal is demodulated (rectified) and amplified, then the output is increased. There are drawbacks, however, especially when there is coating of the probe.

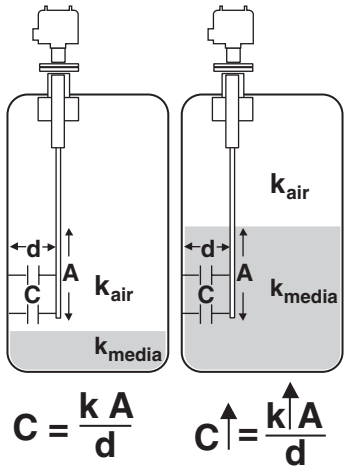

Figure 1-1
Simple Capacitance Probe

An RF Admittance level transmitter is the next generation. Although similar to the capacitance concept, IntelliPoint employs a radio frequency signal and adds the Cote-Shield circuitry within the Electronics Unit. This patented Cote-Shield circuitry is designed into the IntelliPoint series and enables the instrument to ignore the effect of buildup, that is, material coating on the sensing element. The sensing element is mounted in the vessel and provides a change in RF admittance indicating the presence or absence of material.

The Cote-Shield element of the sensor prevents the transmission of RF current through the coating on the sensing element. The only path to ground available for the RF current is through the material being measured.

The result is an accurate measurement regardless of the amount of coating on the probe, making it the most versatile technology available by far. Not only does it work with all types of materials, it's well suited to a very broad range of conditions, from cryogenics to high temperature, from vacuum all the way to 10,000psi
pressure.

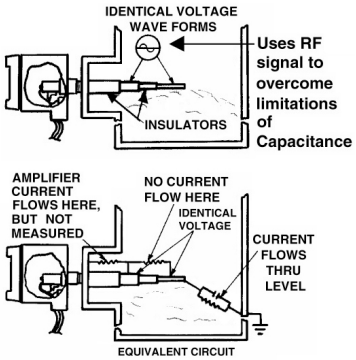

Figure 1-2
RF Admittance Probe with Cote-Shield

1.3 Model Number

Technology

R RF Admittance

Measurement Type

M Manual Calibration (Standard Sensitivity)
G Manual Calibration (High Sensitivity)

Input

T Two-Wire Power Supply, 13-30 Vdc

Housing

0 No Approvals, NEMA 4X/IP66, M20 X 1.5 conduit entries
1 No Approvals, NEMA 4X/IP66, ¾" NPT conduit entries
2 ATEX / IECEx Approved, NEMA 4X/IP66, M20 X 1.5 conduit entries
3 FM / FMc Approved, NEMA 4X/IP66, ¾" NPT conduit entries
5 No Approvals, NEMA 4X/IP66, M20 X 1.5 conduit entries, Dual Seal, Perm-a-Seal sensors – only
6 No Approvals, NEMA 4X/IP66, ¾" NPT conduit entries, Dual Seal, Perm-a-Seal sensors – only
7 FM / FMc Approved, NEMA 4X/IP66, ¾" NPT conduit entries, Dual Seal, Perm-a-Seal sensors – only
9 No Approvals, NEMA 4X/IP66, M20 X 1.5 conduit entries, Dual Seal, Non Perm-a-Seal sensors – only
A No Approvals, NEMA 4X/IP66, ¾" NPT conduit entries, Dual Seal, Non Perm-a-Seal sensors – only
B FM / FMc Approved, NEMA 4X/IP66, ¾" NPT conduit entries, Dual Seal, Non Perm-a-Seal sensors – only

Electronics

0 Integral
1 Remote, no cable
2 Remote w/ 3 m (10 ft.) G.P. Cable
3 Remote w/ 7.6 m (25 ft.) G.P. Cable
4 Remote w/ 10.6 m (35 ft.) G.P. Cable
5 Remote w/ 15.2 m (50 ft.) G.P. Cable
6 Remote w/ 23 m (75 ft.) G.P. Cable
7 Remote w/ (25 ft.) Tri-Ax Cable
8 Remote w/ (50 ft.) Tri-Ax Cable
9 Remote w/ (75 ft.) Tri-Ax Cable
A Remote w/ (10 ft.) Hi-Temp. Cable
B Remote w/ (25 ft.) 1st 10ft Hi-Temp. Cbl.
C Remote w/ (35 ft.) 1st 10ft Hi-Temp. Cbl.
D Remote w/ (50 ft.) 1st 10ft Hi-Temp. Cbl.
E Remote w/ (75 ft.) 1st 10ft Hi-Temp
F Remote w/ (5 ft.) G.P. Cable
G Remote w/ (5 ft.) Tri-Ax Cable
H Remote w/ (10 ft.) Tri-Ax Cable
J Remote w/ (35 ft.) Tri-Ax Cable
K Remote w/ (5 ft.) Hi-Temp. Cable

Output

0 8-16 mA Output

Sensing Element (Reference Section 1.4 for Probe Selections)

Mounting Type (See separate Mounting Chart for first three digits)

	IL	CSL		IL	CSL
xxx1	457 mm (18")	152 mm (6")	xxxG	457 mm (18")	0 mm (0")
xxx2	305 mm (12")	152 mm (6")	xxxH	914 mm (36")	254 mm (10")
xxxA	152 mm (6")	51 mm (2")	xxxJ	914 mm (36")	0 mm (0")
xxxB	305 mm (12")	51 mm (2")	xxxK	1219 mm (48")	254 mm (10")
xxxC	305 mm (12")	89 mm (3.5")	xxxL	1524 mm (60")	254 mm (10")
xxxD	457 mm (18")	51 mm (2")	P00X	IL/CSL Other	
xxxE	457 mm (18")	89 mm (3.5")	A1BX	IL/CSL factory set for Fly Ash	
xxxF	457 mm (18")	254 mm (10")	xxxZ	Other	

R		T			0		

Not all mounting options available with all sensing elements

Notes: CSL (Cote-Shield Length) should extend through Nozzle + Typical "Wall Buildup" + 2 Inches

(1) Available with remote electronics only
(2) Use A1P mounting option
(3) Choose only sanitary mounting options
(4) Available with 0-inch CSL only
(5) Use P00X mounting option
(6) Use A1B mounting option
(7) Use A8B mounting option (¼-inch NPT)
(8) Choose from flange mounting only
(9) FM approved with remote electronics only

NPT Threads

A1B	¾"NPT	316SS	**A2B**	1"NPT	316SS
A1C	¾"NPT	Hastelloy C	**A2C**	1"NPT	Hastelloy C
A1P	¾"NPT	PFA			

Sanitary TriClamps

C2B	1"TriClamp	316SS	**C5B**	2-1/2"TriClamp	316SS
C3B	1½"TriClamp	316SS	**C6B**	3 "TriClamp	316SS
C4B	2"TriClamp	316SS	**C7B**	3 "TriClamp	316SS

DIN Flanges

E01	25 mm	16 bar	RF 316/316L SS	**E02**	25 mm	16 bar	RF CS
EP1	25 mm	40 bar	RF 316/316L SS	**EP2**	25 mm	40 bar	RF CS
EQ1	50 mm	16 bar	RF 316/316L SS	**EQ2**	50 mm	16 bar	RF CS
ER1	50 mm	40 bar	RF 316/316L SS	**ER2**	50 mm	40 bar	RF CS
ES1	80 mm	16 bar	RF 316/316L SS	**ES2**	80 mm	16 bar	RF CS
ET1	80 mm	40 bar	RF 316/316L SS	**ET2**	80 mm	40 bar	RF CS
EU1	100 mm	16 bar	RF 316/316L SS	**EU2**	100 mm	16 bar	RF CS
EV1	100 mm	40 bar	RF 316/316L SS	**EV2**	100 mm	40 bar	RF CS
EW1	150 mm	16 bar	RF 316/316L SS	**EW2**	150 mm	16 bar	RF CS
EX1	150 mm	40 bar	RF 316/316L SS	**EX2**	150 mm	40 bar	RF CS

ANSI Flanges

DA1	1"	150#	RF 316/316L SS	**DA2**	1"	150#	RF CS
DB1	1½"	150#	RF 316/316L SS	**DB2**	1½"	150#	RF CS
DC1	2"	150#	RF 316/316L SS	**DC2**	2"	150#	RF CS
DD1	2½"	150#	RF 316/316L SS	**DD2**	2½"	150#	RF CS
DE1	1"	300#	RF 316/316L SS	**DE2**	1"	300#	RF CS
DF1	1½"	300#	RF 316/316L SS	**DF2**	1½"	300#	RF CS
DG1	2"	300#	RF 316/316L SS	**DG2**	2"	300#	RF CS
DH1	2½"	300#	RF 316/316L SS	**DH2**	2½"	300#	RF CS
DI1	3"	150#	RF 316/316L SS	**DI2**	3"	150#	RF CS
DJ1	3"	300#	RF 316/316L SS	**DJ2**	3"	300#	RF CS
DK1	4"	150#	RF 316/316L SS	**DK2**	4"	150#	RF CS
DL1	4"	300#	RF 316/316L SS	**DL2**	4"	300#	RF CS
DM1	6"	150#	RF 316/316L SS	**DM2**	6"	150#	RF CS
DN1	6"	300#	RF 316/316L SS	**DN2**	6"	300#	RF CS

1.4 Sensing Element List

	#	Application	Sensing Element Part Number	Pressure/Temperature	Wetted Parts
General & Application Specific Sensing Elements	00	General purpose	700-1202-001 Remote & 700-1202-021 Integral	13.8 bar @ 232°C (200 PSI @ 450°F)	316/316L SS and PEEK
	02	General purpose, longer insertion lengths w/cable attachment and 316/316L SS bottom weight	700-1202-014 Remote & 700-1202-024 Integral	13.8 bar @ 177°C (200 PSI @ 350°F)	316/316L SS and PEEK
	03	Proximity	700-1202-018 Remote & 700-1202-028 Integral	13.8 bar @ 232°C (200 PSI @ 450°F)	316/316L SS and PEEK with 76mm (3) 216SS proximity plate
	04	General purpose, high temperature and pressure	700-1202-041 Remote	69 bar @ 121°C (1000 PSI @ 250°F)	316/316L SS and PEEK
			700-1202-042 Integral	20.7 bar @ 232°C (300 PSI @ 450°F)	
	06	General purpose with FDA approved materials of construction	700-1202-031 Remote & 700-1202-032 Integral	13.8 bar @ 232°C (200 PSI @ 450°F)	316/316L SS and FDA grade PEEK
	07	General purpose for granular materials	700-1202-010 Remote & 700-1202-020 Integral	13.8 bar @ 232°C (200 PSI @ 450°F)	316/316L SS and PEEK with 7/8 inch dia. 316/316L SS collar
	09	General purpose for granular materials w/FDA approved materials of construction	700-1202-033 Remote & 700-1202-034 Integral	13.8 bar @ 232°C (200 PSI @ 450°F)	316/316L SS and FDA grade PEEK with 7/8 inch dia. 316/316L SS collar
	10	Corrosive liquids	700-0001-018 Remote	3.4 bar @ 149°C (50 PSI @ 300°F)	PFA
	11	General purpose, higher pressure, TFE compatibility required	700-0201-005 Integral or Remote	69 bar @ 38°C (1000 PSI @ 100°F)	316/316L SS and TFE
				13.8 bar @ 232°C (200 PSI @ 450°F)	
	12	Corrosive material, higher pressure	700-0201-005 Integral or Remote (Hastelloy C)	69 bar @ 38°C (1000 PSI @ 100°F)	Hastelloy C and TFE
				13.8 bar @ 232°C (200 PSI @ 450°F)	
	13	Sanitary (Non- 3A Approved)	700-0201-019 Integral or Remote	13.8 bar @ 149°C (200 psi @ 300°F)	316/316L SS and TFE
	14	General purpose, low pressure	700-0202-002 Integral or Remote	3.4 bar @ 149°C (50 PSI @ 300°F)	316/316L SS and TFE
				1.4 bar @ 232°C (20 PSI @ 450°F)	
	15	Heavy Duty agitated tanks or material w/bulk density	700-0202-043 Integral or Remote	69 bar @ 38°C (1000 PSI @ 100°F)	316/316L SS and TFE
				13.8 bar @ 232°C (200 PSI @ 450°F)	
	16	High integrity seal for hazardous materials	700-0002-360 Integral or Remote	34.5 bar @ 149°C (500 PSI @ 300°F)	PFA
	17	Sanitary low pressure	700-0202-029 Integral or Remote	34.5 bar @ 149°C (50 PSI @ 300°F)	316/316L SS and TFE
	18	Corrosive material, higher pressure with water like viscosity	700-0001-022 Integral or Remote	69 bar @ 38°C (1000 PSI @ 100°F)	TFE
				34.5 bar @ 149°C (500 PSI @ 300°F)	
	19	Interface Measurement	700-0002-023 Integral or Remote	69 bar @ 38°C (1000 PSI @ 100°F)	316/316L SS and TFE
				34.5 bar @ 149°C (500 PSI @ 300°F)	
	20	Miniature Pilot Plant Sensor	700-0209-002 Remote	69 bar @ 121°C (1000 PSI @ 250°F)	316/316L SS and TFE
				0 bar @ 232°C (0 PSI @ 450°F)	
	21	Heavy Duty agitated tanks or material w/bulk density and corrosive	700-0202-043 Integral or Remote	69 bar @ 38°C (1000 PSI @ 100°F)	Hastelloy C and TFE
				13.8 bar @ 232°C (200 PSI @ 450°F)	
	22	700-0202-043 with proximity plate	700-0202-044 Integral or Remote	69 bar @ 38°C (1000 PSI @ 100°F)	316/316L SS and TFE
				13.8 bar @ 232°C (200 PSI @ 450°F)	
	24	Inactive cable probe with active weight - liquids only	700-0005-285 Remote & 700-0005-485 Integral	200 psi @ 200°F	316/316L SS and FEP
	25	Inactive cable probe with active weight - corrosive liquids	700-0005-285 Remote & 700-0005-485 Integral	200 psi @ 200°F	Hastelloy C and FEP
	26	Extra heavy duty rearmount	700-0220-001 Remote	20 psi @ 180°F	316/316L SS and FEP
	27	Extra heavy duty	700-0221-002 Remote	50 psi @ 300°F	316/316L SS and FEP
				20 psi @ 450°F	
	28	General purpose very high pressure	700-1202-051 Remote	1500 PSI @ 250°F	316/316L SS and PEEK
			700-1202-052 Integral	500 psi @ 450°F	
Fly Ash Precipitators, Baghouse, and Economizers	31	No Hopper Installation	700-0029-001 Remote	0.1 bar @ 260°C (2 PSI @ 500°F)	316/316L SS and TFE
	32	Hopper Installation up to 200mm (8")	700-0029-002 Remote	0.1 bar @ 260°C (2 PSI @ 500°F)	316/316L SS and TFE
	33	Hopper Installation up to 406mm (16")	700-0029-003 Remote	0.1 bar @ 260°C (2 PSI @ 500°F)	316/316L SS and TFE
	34	Hopper Installation up to 521mm (20.5")	700-0029-004 Remote	0.1 bar @ 260°C (2 PSI @ 500°F)	316/316L SS and TFE
	35	Hopper Installation up to 635mm (25")	700-0029-005 Remote	0.1 bar @ 260°C (2 PSI @ 500°F)	316/316L SS and TFE
	36	Mounting directly on hopper, insulation 2" max.	700-0029-102 Remote	2 psi @ 1500°F	316/316L SS and Ceramic
	37	Max recommended nozzle length 9.5"	700-0029-103 Remote	2 psi @ 1500°F	316/316L SS and Ceramic
	38	Max recommended nozzle length 19"	700-0029-104 Remote	2 psi @ 1500°F	316/316L SS and Ceramic
	39	Max recommended nozzle length 22"	700-0029-105 Remote	2 psi @ 1500°F	316/316L SS and Ceramic
	40	Max recommended nozzle length 25"	700-0029-106 Remote	2 psi @ 1500°F	316/316L SS and Ceramic
Plugged Chute Detection	50	Flush Mount Sensor, 305mm^2 (12 inches^2), Heavy Duty	700-0207-001 Remote	0.1 bar @ 82°C (1 PSI @ 180°F)	304SS and Polyurethane
	51	Flush Mount Sensor, 305mm^2 (12 inches^2), Higher Temp	700-0207-002 Remote	0.1 bar @ 149°C (1 PSI @ 300°F)	304SS and TFE
	52	Flush Mount Sensor, 305mm^2 (12 inches^2), w/Curved radius 153, 229, 305mm (6,9 or 12")	700-0207-003 Remote	0.1 bar @ 82°C (1 PSI @ 180°F)	304SS and Neoprene
	53	Flush Mount Sensor, 305mm^2 (12 inches^2),Extra Heavy Duty	700-0207-004 Remote	0.1 bar @ 82°C (1 PSI @ 180°F)	410SS and UHMW Polyethylene
	55	Flush Mount Sensor, 203mm^2 (18 inches^2), Heavy Duty	700-0207-006 Remote	0.1 bar @ 82°C (1 PSI @ 180°F)	304SS and Polyurethane
High Pressure/Temperature	60	High Pressure and High Temperature	700-0204-038 Remote	137.9 bar @ 93°C (2000 PSI @ 200°F)	316/316L SS and Ceramic
				68.9 bar @ 260°C (1000 PSI @ 500°F)	
	61	High Temperature	700-0204-002 Remote	1 psi @ 700°F	316/316L SS and Ceramic
				0 bar @ 816°C (0 PSI @ 1500°F)	
	62	Very high pressure - not for steam	700-0204-048 Remote	4000 psi @ 600°F	316/316L SS, Vespel and Ceramic
	64	High pressure and high temperature	700-0204-024 Remote	1000 psi @ 750°F	316/316L SS, Monel 400 and Alumina Ceramic
	66	700-0204-002 with secondary seal - vertical only in liquids	700-0204-022 Remote	1000 psi @ 100°F	316/316L SS and Ceramic
				200 psi @ 800°F	
3A	67	700-3201 Series 3A Sanitary Probe	700-3201-001 Remote & 700-3201-002 Integral	13.8 bar @ 121°C (200 psi @ 250°F)	316/316L SS and PEEK
Retractable	72	Retractable, bare center rod	700-0201-027 Integral or Remote	150 psi @ 300°F	316/316L SS and TFE
	73	Retractable, insulated center rod	700-0201-028 Integral or Remote	150 psi @ 300°F	316/316L SS and TFE
Clear Line (In-Line Style)	80	2" Clear line	700-4200-020 Remote	7 bar @ 121°C (100 psi @ 250°F)	316/316L SS and PEEK
	81	3" Clear line	700-4200-030 Remote	7 bar @ 121°C (100 psi @ 250°F)	316/316L SS and PEEK
	82	4" Clear line	700-4200-040 Remote	7 bar @ 121°C (100 psi @ 250°F)	316/316L SS and PEEK
	83	6" Clear line	700-4200-060 Remote	7 bar @ 121°C (100 psi @ 250°F)	316/316L SS and PEEK
Specialty	85	Leak detection	700-9000-494 Remote	0 psi @ 185°F	316/316L SS and TFE
	87	SIL floating roof and hydrocarbon liquids - 1.5"	700-0005-595 Integral	0 psi @ 185°F	Brass Polyolefin and FEP - 1.5 inch diameter probe
Integrated Ground Retewrence	90	Perforated concentric shield	700-0201-059 Integral or Remote	300 psi @ 300°F	316/316L SS and TFE
	91	General purpose with perforated concentric shield	700-1202-015 Remote	13.8 bar @ 232°C (200 PSI @ 450°F)	316/316L SS and PEEK
			700-1202-016 Integral		
	92	General purpose higher pressure with perforated concentric shield	700-1202-045 Remote	1000 PSI @ 250°F	316/316L SS and PEEK
			700-1202-046 Integral	300 psi @ 450°F	
	93	General purpose very high pressure with perforated concentric shield	700-1202-055 Remote	1500 PSI @ 250°F	316/316L SS and PEEK
			700-1202-056 Integral	500 psi @ 450°F	
	94	Miniature Pilot Plant Sensor with concentric shield	700-0209-024 Remote	69 bar @ 121°C (1000 PSI @ 250°F)	316/316L SS and TFE
				0 bar @ 232°C (0 PSI @ 450°F)	
	NN	Retrofit Kit			
	ZZ	Sensing Element Not Listed			

1.5 Dual Compartment Housing

Figure 1-3
Dual Compartment Housing Detail

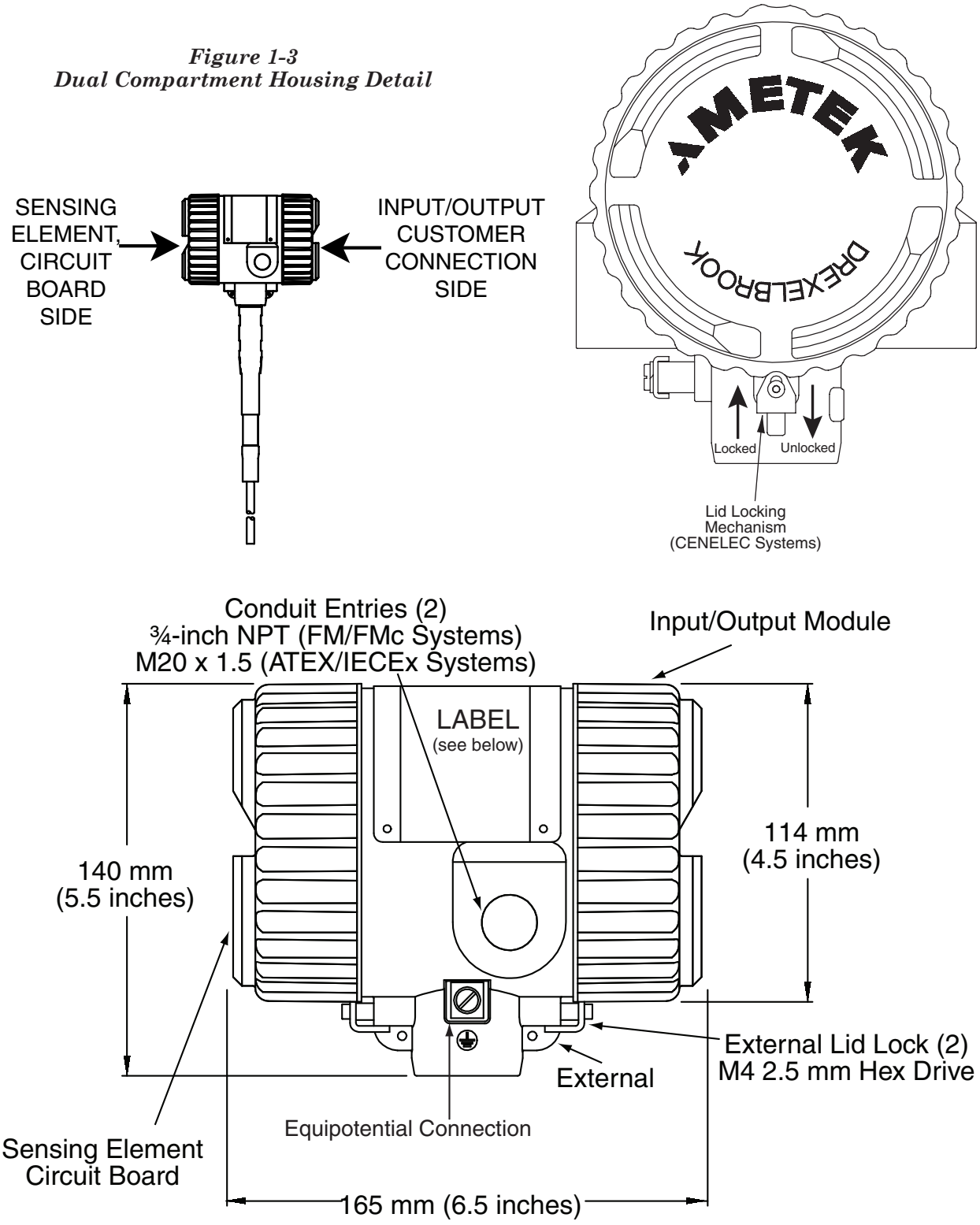

NOTICE **The Input/Output Module (IOM) is located on Customer Connection side; sensing element/circuit board are on opposite side.**

Section 2: Installation

2.1 Unpacking

Carefully remove the contents of the shipping carton and check each item against the packing list before destroying any packing material. If there is any shortage or damage report it to the factory immediately.

2.2 Mounting and Installation Guidelines

The IntelliPoint RF instrument can be mounted vertically, horizontally, or at an angle. The mounting location should be as free as possible from vibration, corrosive atmospheres, and the possibility of mechanical damage. Ambient temperatures at electronics should be between limits as specified by control drawings in section 7.

The IntelliPoint RF utilizes a dual compartment housing and a completely encapsulated input/output module, to reduce the possibility of damage occuring from water migrating into the housing through the conduit.

To further reduce the possibility of damage caused by water in the conduit, install a drip loop and breather drain to purge any accumulating moisture. Refer to ***Figure 2-1.***

When properly installed, the GREEN LED will illuminate when power is applied. .

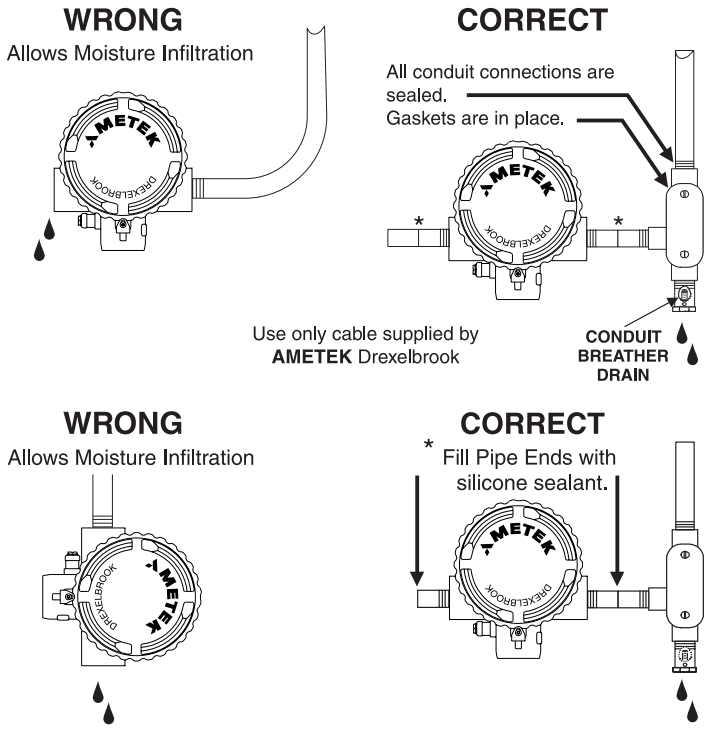

NOTICE **Cable fittings supplied are weather-resistant. They are NOT certified as explosionproof (XP) or flameproof (d) unless they are specifically marked.**

Figure 2-1
Recommended Conduit Connection

2.2 Mounting and Installation Guidelines (continued)

NOTICE

The IntelliPoint RF instrument is rated intrinsically safe (I.S.) when power is provided from an I.S. supply.

WARNING:
The IntelliPoint RF equipment is also rated explosion-proof / flame-proof.
When installing in explosion hazardous areas [rated "potentially hazardous" (EU) or "hazardous classified" (USA)] observe all national and local regulations as well as specifications in the certificate.

Mount the sensing element using the installation guidelines in ***Figure 2-2.***

When installing IntelliPoint RF instrument, ambient temperature at electronics must not exceed 70°C (158°F).

When installing flange-mounted sensing elements, keep mating surfaces and bolts free of paint and corrosion to ensure proper electrical contact with vessel. Avoid using excessive amounts of TFE tape when installing threaded sensing elements.

NOTICE

Install systems with threaded NPT connection via wrench flats on the process connection ONLY.

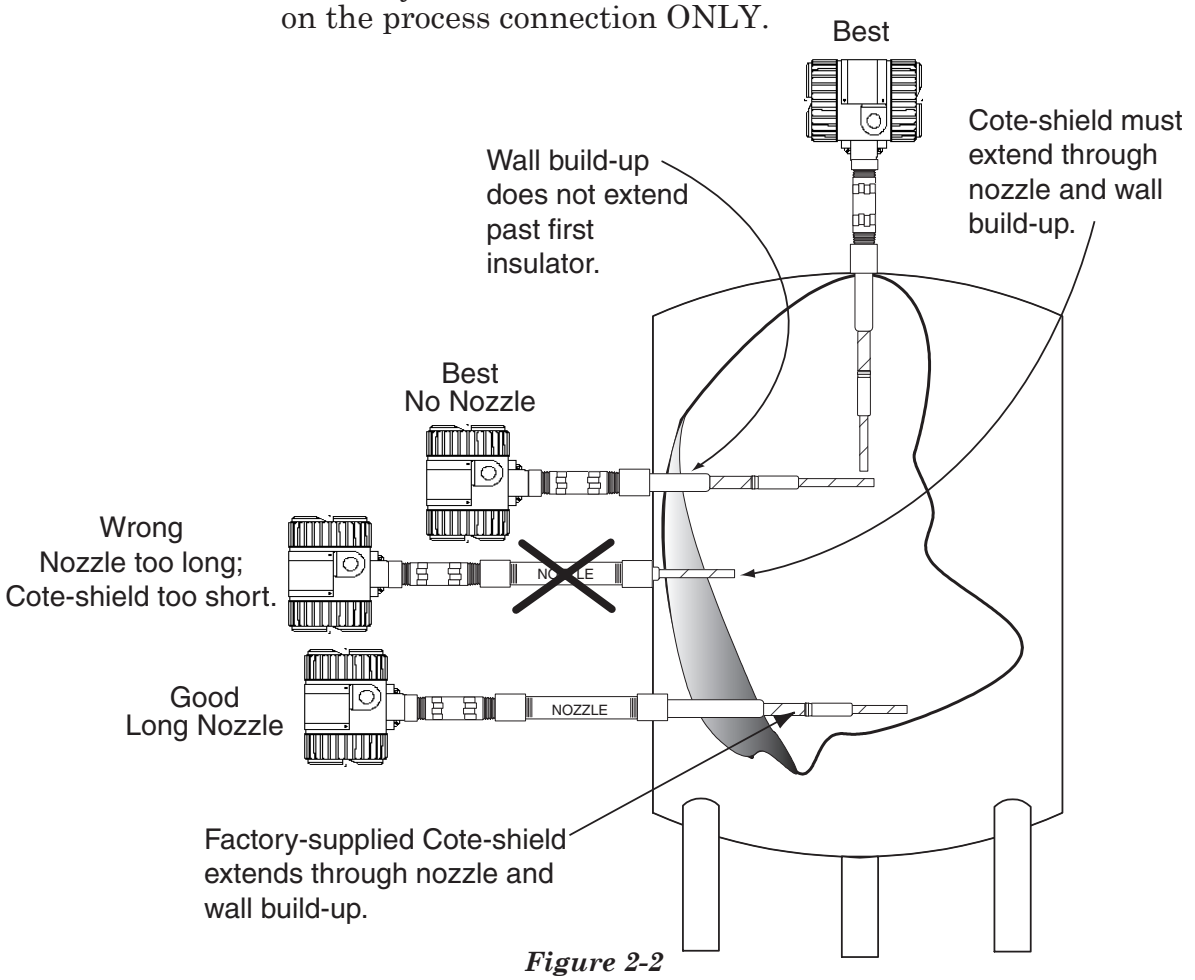

Figure 2-2
Installation Considerations

2.2 Mounting and Installation Guidelines (continued)

Mount the sensing element as to avoid enhancing electrostatic discharge from the process medium, as is good practice with any thermowell, displacer, or sampler. This includes correct bonding to the tank or silo wall.

If installation area is rated explosion-proof and requires conduit seal fittings, they should be used in accordance with company standards and local codes.

Mounting the sensing element inside a pipe is not recommended.

Do not mount a Cote-Shield sensing element through a nozzle that exceeds the length of first insulator.

Ensure there are no obstructions or agitator blades to interfere with sensing element.

Rigid sensing elements can be mounted either vertically or horizontally.

2.3 Installation of Flush-Mounted Sensing Elements

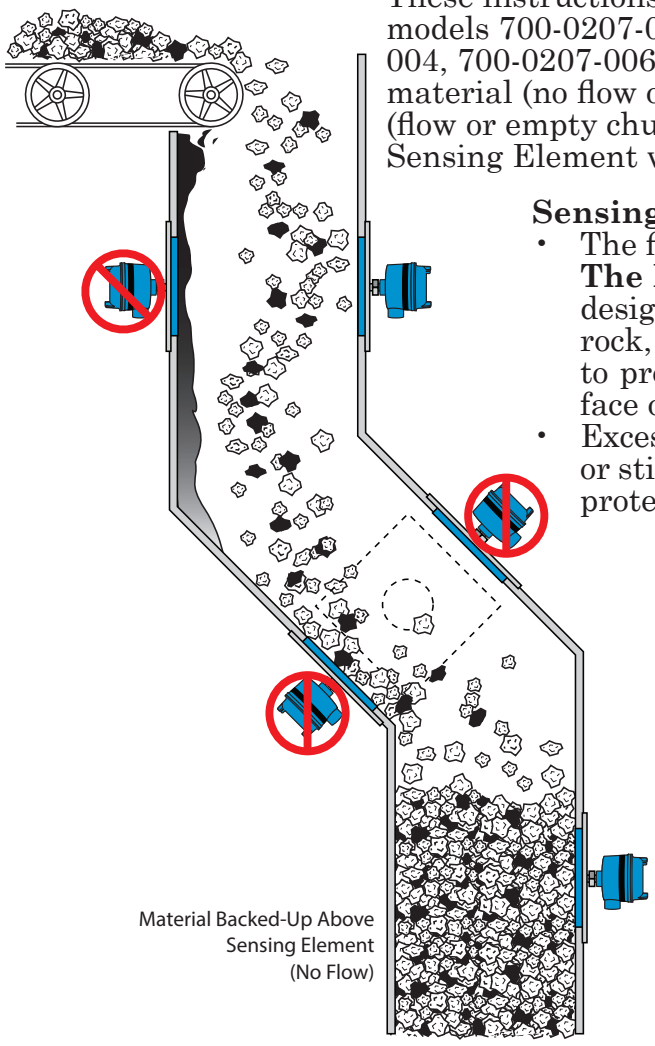

These instructions apply to all flush on/off sensing elements, models 700-0207-001, 700-0207-002, 700-0207-003, 700-0207-004, 700-0207-006. These systems will sense presence of material (no flow or plugged chute) and absence of material (flow or empty chute) at the sensing element. The Flush Sensing Element will ignore free falling material.

Sensing Element at the Top of a Chute.

- The flush sensing element should be mounted **In The Flow Stream**. These sensing elements are designed and built to withstand the impact of coal, rock, wood, chips, etc. This location is important to prevent excessive build up of material on the face of the sensing element.
- Excessive build up, typically consisting of wet and/or sticky fines, can occur if the sensing element is protected from falling material.

Sensing Element in an angle chute.

- Do not mount on the top or bottom.
- Best mounted on either side

Sensing Element at the Bottom

- Mount on any side.
- Low-Level sensors can be used to detect a plug or to insure that a seal is present (chute is full at this point).

2.4 Input Wiring

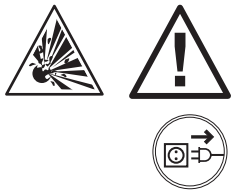

WARNING:
If the IntelliPoint instrument is located in a hazardous environment, do not open the enclosure cover or make/break any electrical connections without first disconnecting electrical power at the source. Ensure that the wiring, electrical fittings and conduit connections conform to electrical codes for the specific location and hazard level.

The IntelliPoint RF instrument requires a 13-30 Vdc supply to operate. To access, remove the housing lid on the customer connections side to reveal the Input/Output Module **(IOM)**. The IOM is an encapsulated assembly that contains the power supply, outputs and eight wiring terminals. IOM is held in place with three screws. ***See Figure 2-3***.

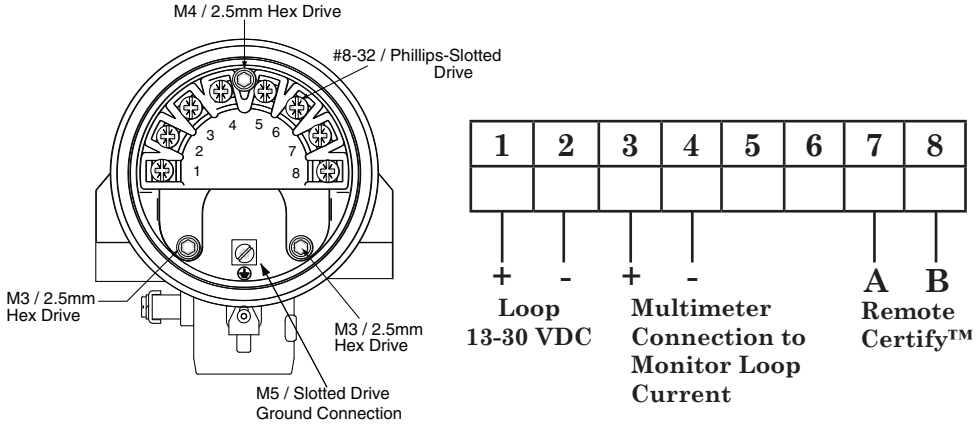

Figure 2-3
Input Wiring

2.5 Spark Protection

Applications involving insulating granulars and insulating liquids may produce a static discharge that can damage the electronics. The RF series instrument is supplied with integral heavy-duty spark protection to prevent static discharges from damaging the electronic units.

2.6 Circuit Board

The circuit board is located on the sensing element/circuit side of the housing (marked on label). Remove the housing lid to access the setpoint adjustment status LEDs, time delay adjustment, and configuration jumpers. ***See Figure 2-4.***

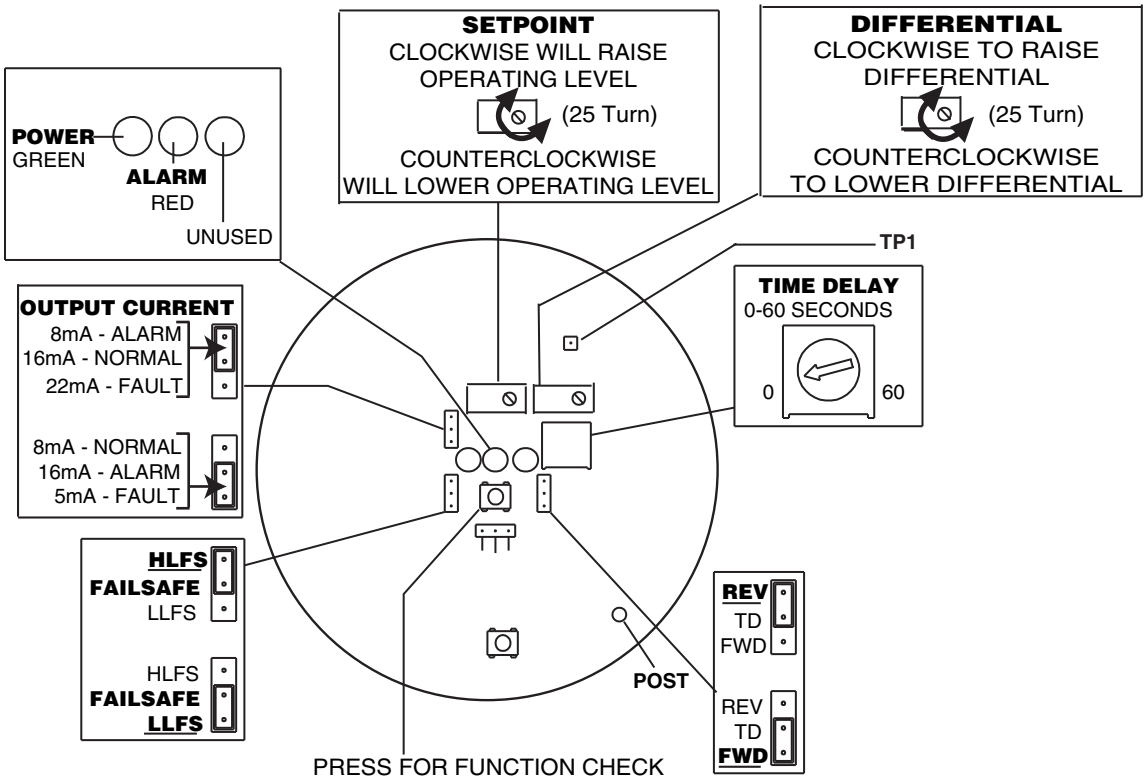

Figure 2-4 Circuit Board (Sensing Element Circuits View)

2.6.1 Time Delay

The TIME DELAY adjustment is located on the sensing element/circuit board side of the housing. It is used to help stop an oscillating relay output due to agitation or waves in the vessel. The time delay adjustment can be field-adjusted from 0 to 60 seconds. The unit is shipped with the TIME DELAY setting at zero (0) seconds.

NOTICE

The Time Delay adjustment is a 270-Degree turn pot and is at zero seconds when in the full counter-clockwise position. **Do not force** the pot past the stop or damage will occur.

2.6.2 Time Delay Action

Time delay action describes whether the relay contacts are delayed from going into the alarm state or recovering from an alarm state.

- FWD: Delays system from coming out of alarm.
- REV:Delays system from going into alarm.
- Instrument is supplied with TIME DELAY action set in forward mode (FWD) position.
- Time delay action is field-selectable using jumper located on sensing element/circuit board side of housing.

2.6.3 Failsafe

"Failsafe" describes the level condition that causes the transmitter to go into alarm.

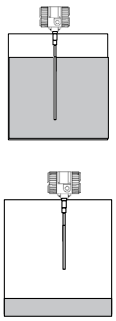

- The Failsafe is field-selectable using a jumper located on the sensing element/circuit board side of the housing.
- High Level Failsafe (**HLFS**) is the condition when the probe is covered, the unit is in alarm.
- Low Level Failsafe (**LLFS**) is the condition when the probe is uncovered, the unit is in alarm.
- The instrument is supplied with the failsafe jumper set in high level (**HLFS**) position.

2.6.4 Current Output Assignment

The Output Current can be configured using the jumpers as follows:

- Jumper on pin #1 and #2:
  8mA - Alarm, 16mA - Normal, 22mA - Fault
- Jumper on pin #2 and #3:
  8mA - Normal, 16mA - Alarm, 5mA - Fault

2.6.5 Manual Certify

The **Manual Certify (High Level Fail Safe Only)** test feature performs a confidence test of the system by duplicating the same signal as a high-level alarm condition without requiring the system to be removed from the tank.

Simulating a high level with the **Manual Certify** feature:

- Forces unit into an alarm condition.

The **Manual Certify** test is initiated with the press of the **Manual Certify** button located on the sensing element/circuit side of the housing. After pressing the button, the green LED flashes for 5 seconds and the red LED illuminates. The output is moved to the alarm condition for 2 seconds. If the red LED does not light, and the loop current does not move to the alarm condition, the Manual Certify test has detected a fault. Consult the trouble-shooting section of this Instruction Manual.

2.7 Output and LED Status

There are two status LEDs located on the sensing element/ circuit board side of the housing. The green LED is used to indicate the unit has power. The red LED is used to indicate the status of the unit: NORMAL or ALARM. ***See Figure 2-4***.

NOTICE

Second Red LED is not used on the Two-Wire Transmitter

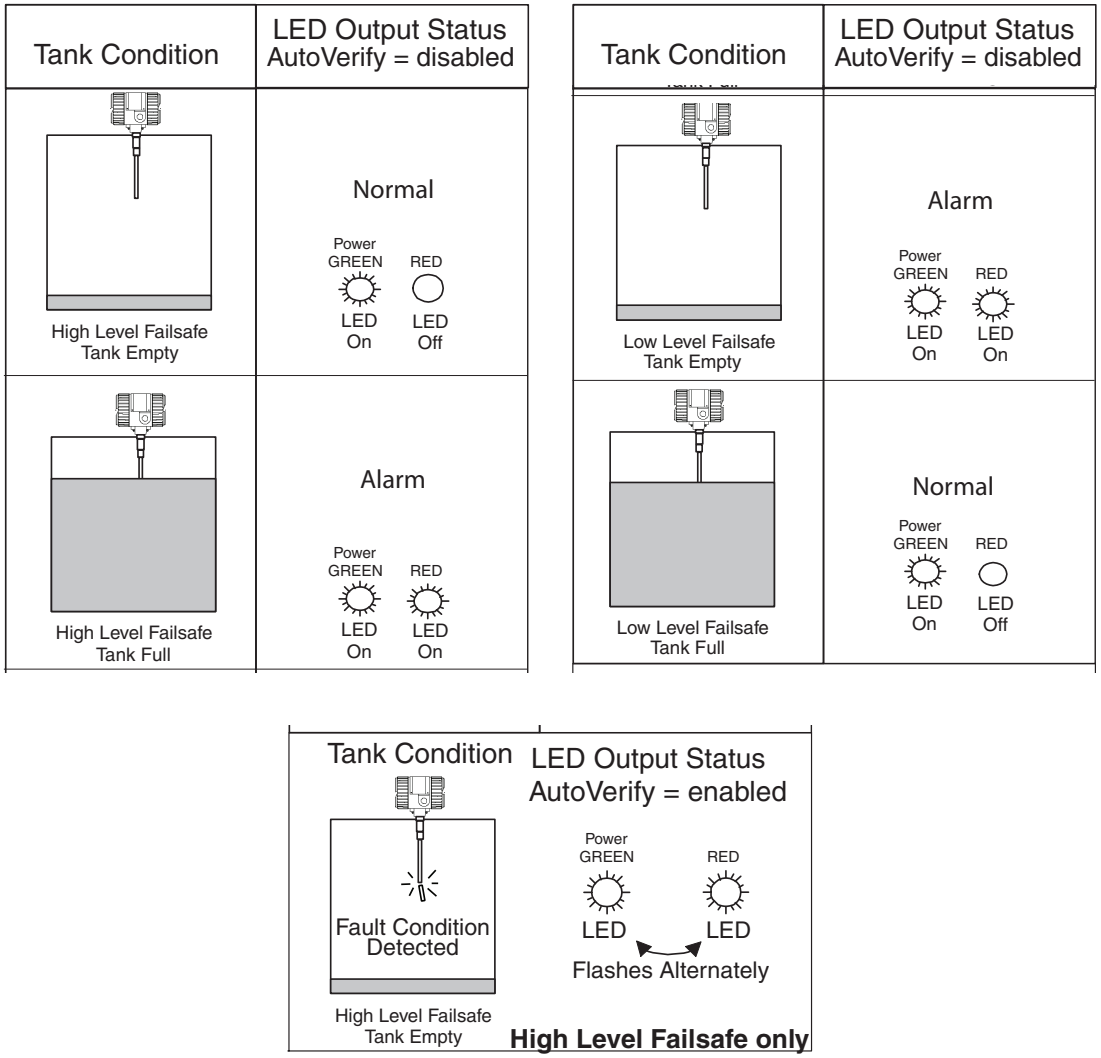

Figure 2-5
Output and LED Status

2.8 Sensing Element Connection

Sensing element connects to the rear side of the circuit board and is factory-installed.

NOTICE

The sensing element is sealed to the housing and cannot be removed without permanent damage.

For IntelliPoint RF instruments that are mounted remotely from the sensing element, an additional housing with terminals is provided to connect the cable from the sensing element. This housing is factory wired to the Intellipoint circuit board. ***Ref Figure 2-7.*** Connect Green (Ground) wire to green screw, Red (Shield) wire to red screw, and Blue (Center) wire to blue screw.

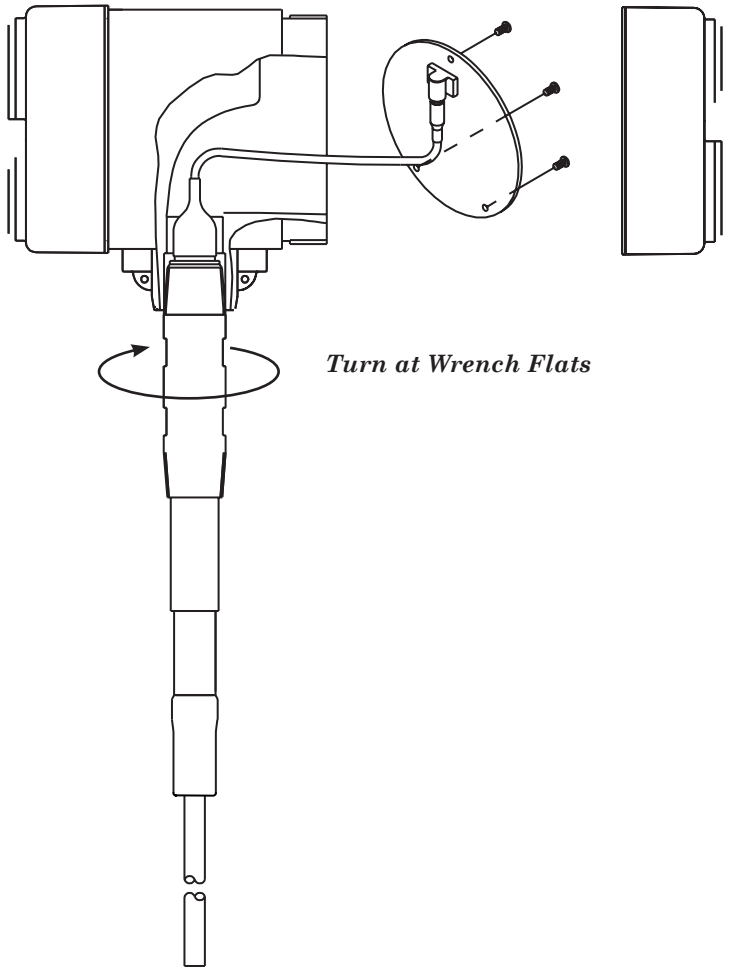

Figure 2-6
Sensing Element Connection
(Integral Housing)

2.8 Sensing Element Connection (continued)

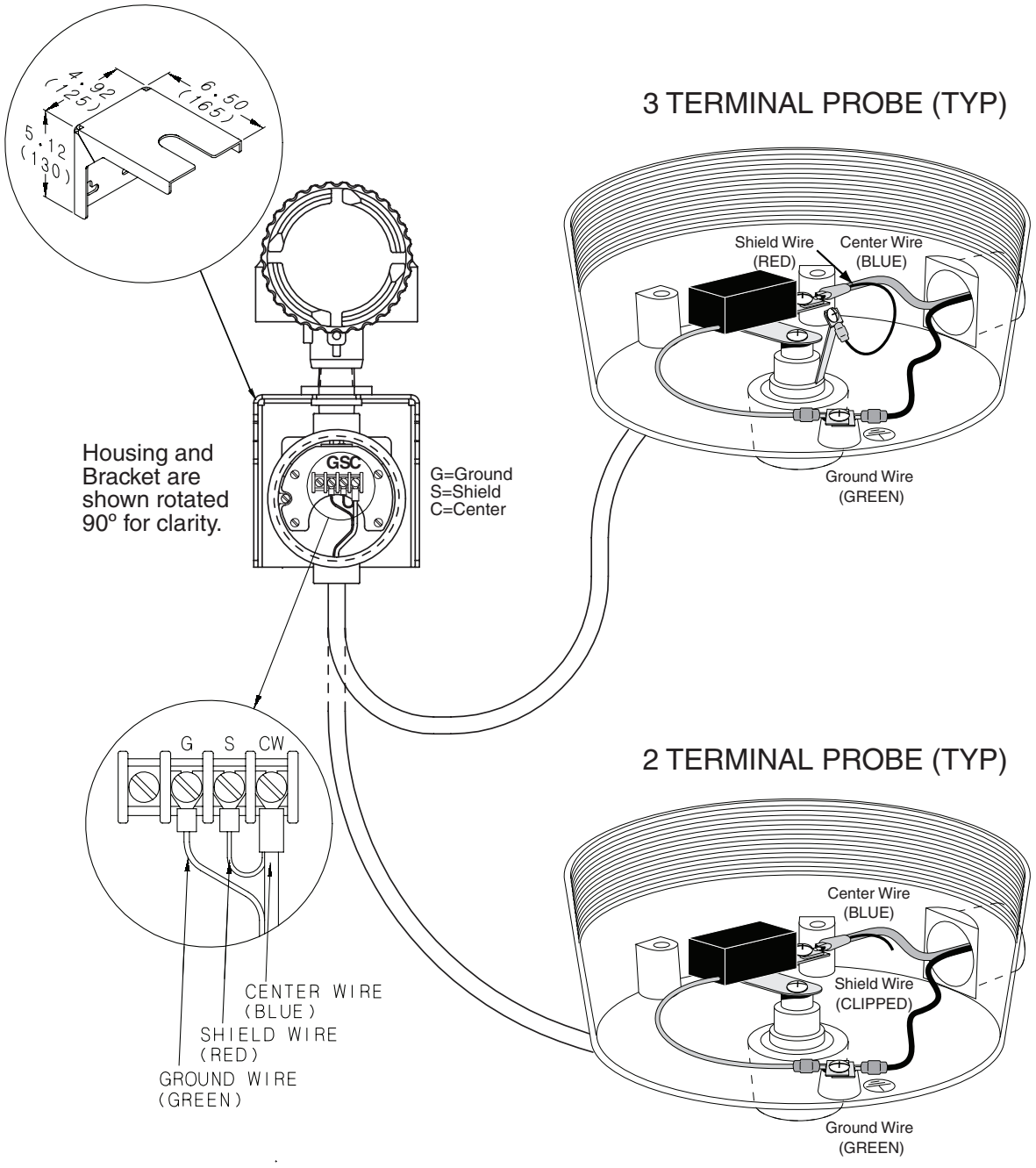

Figure 2-7
Sensing Element Connection
(Remote Housing)

Section 3

Section 3: Calibration

WARNING:
Before removing the explosion-proof housing cover in a potentially hazardous area, make certain that the area is safe. When calibration is complete, the cover must be replaced.

3.1 Setpoint Control

There is a single adjustment located on top of the instrument that controls the point at which the Alarm / Normal condition switches. A Red LED indicates the Alarm condition.

Each revolution of the control changes the operating point approximately 4 pF. (For high-sensitivity models, each revolution will change operating point approximately 1 pF.)

Turning the adjustment clockwise will raise the level at which the Alarm/Normal condition switches. Turning the adjustment counterclockwise will lower the level at which the Alarm / Normal condition switches. ***Refer to Figure 3-1 and Section 3.3.***

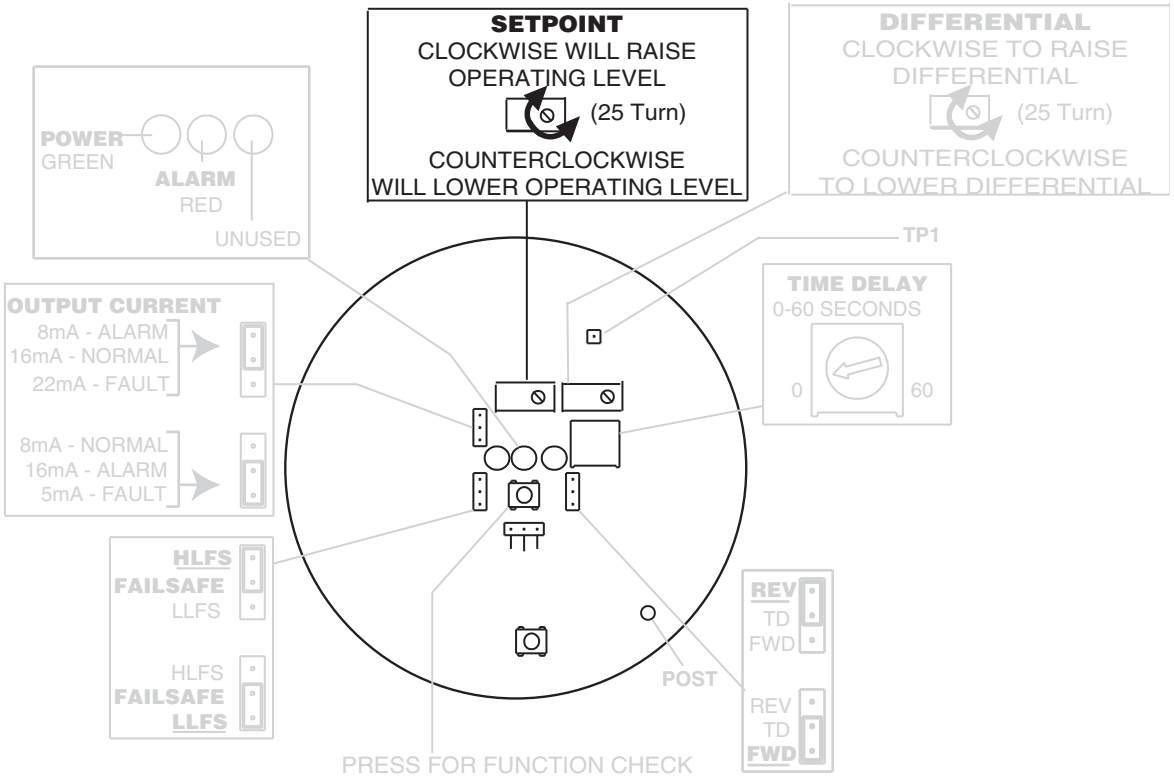

Figure 3-1
SetPoint Adjustment

3.2 Adjustable Differential Controls

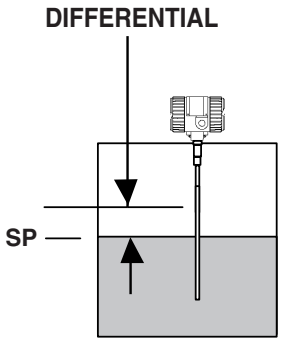

Differential is the hysteresis (dead band), or change in level, necessary to switch electronic unit from one state to another. It is useful to prevent oscillation "chatter" on those occasions when level happens to be right at switching point or when surface is agitated.

RMT Series level control with adjustable differential allows user to determine amount of capacitance change (hence level) between control point and recovery point. User can select two points on a vertical sensing element where Alarm and Normal points switch.

Range of operation is 3 to 100pF.

Low point range is that range of capacitance over which lower switching point may be adjusted.

Differential range corresponds to differential in level on sensing element and depends on both the capacitance of the element itself and the properties of the material being measured. ***See Figure 3-2*** for location of adjustments. For calibration of adjustable differential units, see ***Section 3.3.5***

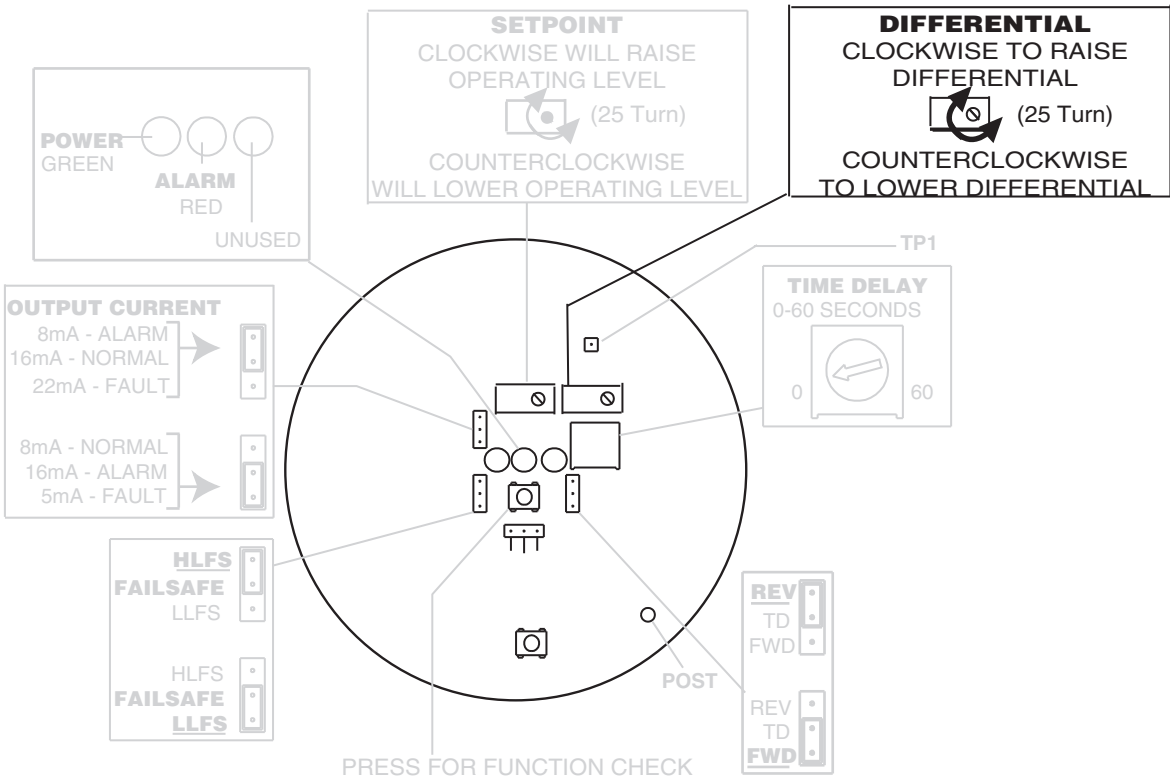

Figure 3-2
Differential Adjustment

3.3 Calibration Procedures

NOTICE

All RMT Series controls with bare metal sensing elements are factory-set to switch in all water-based conducting materials. NO calibration adjustment is needed when measuring conductive media. .

3.3.1 Quick Calibration

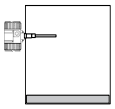

Quick Calibration method is ONLY recommended for horizontally mounted, bare metal, Cote-Shield sensing elements. In all cases it is necessary to have material level ***below*** the probe (sensing element in air).

Red LED OFF = normal condition

1. Turn the Differential adjustment to the full counter clockwise position.

2. For either High Level Fail Safe (HLFS) or Low Level Fail Safe (LLFS) begin with the sensing element totally uncovered.

3. Starting with SetPoint adjustor in full counter clockwise (ccw) position, slowly turn clockwise (cw) until switch changes state. [Red LED will turn OFF in HLFS and turn ON in LLFS].

4. Note position of SetPoint adjustor. Turn it clockwise (cw) from this point the additional number of turns indicated in ***Quick Calibration Table 3-1***.

Calibration is Complete

Material Being Measured	Mode #7 (Standard Sensitivity	Mode # 8 (High Sensitivity)
Conductive Materials (Water-Based) see note #1	15 Turns (Note 2)	20 Turns
Insulating Liquids, Organics, Oil, Plastics	1/2 Turn	2 Turns
Granular / Solid materials above 50# / ft^3	1/2 Turn	2 Turns
Granular / Solid materials above 25-50# / ft^3	1/2 Turn	1 Turn
Granular / Solid materials less 20# / ft^3	Use High Sensitivity Mode #8	3/4 Turn

Note 1 - Most water based materials can be considered conductive, such as acids, bases, salt solutions, water based slurries, and very wet granular materials. Carbon black and powdered metals conduct even without water.

Note 2 - With conducting materials, if heavy build up is anticipated, calibration adjustment can be turned to its clockwise limit.

Table 3-1
Quick Calibration Chart

3.3.2 Calibration of Horizontal Insulated Sensing Elements or Horizontal Sensing Elements in Insulating Materials

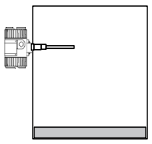

1. Begin with sensing element totally uncovered.
2. Turn the Differential adjustment to the full counter clockwise position.
3. Starting with the SetPoint adjustor in full counter clockwise (ccw) position, slowly turn clockwise (cw) until switch changes state. [Red LED will turn OFF in HLFS, and turn ON in LLFS].
4. Note position of adjustor.
5. Increase material level well above sensing element.
6. Turn SetPoint adjustment clockwise (cw) from this point, counting the additional number of turns until the Red LED, once again, changes state.

   Note: Pot continues to spin even at the end of its adjustment (no mechanical stop).

7. Turn SetPoint adjustor counterclockwise (ccw) half the number of turns that were counted in step 6.
8. Record that half number of turns as "PRELOAD" for use later in recalibration. ***See Section 3.3.4.***

Calibration is Complete

If less than 1/4 turn of adjustment is observed between point where sensing element was uncovered and when covered, consult factory.

3.3.3 Calibration of Vertical Insulated Sensing Elements or Vertical Sensing Elements in Insulating Materials

Red LED OFF = normal condition

1. Turn the Differential adjustment to the full counter clockwise position.

2. Set level to where control is desired. [Minimum of 3 inches should cover sensing element.]

3. Starting from full counter clockwise position, turn SetPoint adjustor clockwise, counting the turns until switch changes state [LED changes state].

4. Record that number of turns as "PRELOAD" for use later in recalibration. ***See Section 3.3.4.***

Calibration is Complete

3.3.4 Recalibration

If amount of preloading was recorded at time of initial calibration, it is possible to replace instrument without experimentally determining proper amount of preload.

1. Turn the Differential adjustor to the full counter clockwise position.

2. For recalibration using procedure in ***Section 3.3.2***, follow Steps 1, 2, 3, and 4, then turn SetPoint adjustor further clockwise amount of preload.

3. For recalibration using procedure in ***Section 3.3.3***, turn SetPoint adjustor clockwise. from full counter-clockwise position, by amount of preload.

4. When recalibrating for bare sensing elements in conductive materials (factory set), turn tuning SetPoint adjustor to full clockwise position. No other adjustment is necessary. (Minimum of 25 turns.)

.

3.3.4 Recalibration (Continued)

Nonvolatile Memory

The IntelliPoint has nonvolatile memory which allows the unit to re-start after power outages without recalibrating.

When the IntelliPoint is powered for the first time the internal microprocessor records and stores the "Air" value.
This is the uncovered value of the sensor mounted in the vessel. The IntelliPoint will also store the last covered value and the last uncovered value.

Whenever the IntelliPoint is powered it uses these values as a reference point to determine its current condition (normal or alarm).

The IntelliPoint has nonvolatile memory which retains the recorded values even if power is lost for months. When the IntelliPoint regains power after a power outage, the microprocessor compares the stored values to the current measured value. It will then determine its current status based on this.

3.3.5 Calibration of Adjustable Differential Units (HLFS and LLFS)

1. Put Fail-Safe switch in **HLFS** position.
   See Section 2.5.3.

2. Turn SetPoint adjustor to full counter clockwise position.

3. Turn Differential adjustor to full counter clockwise position as well.

4. Adjust material level to lower point of desired control band.

5. Slowly turn SetPoint adjustor clockwise until instrument just operates (Red LED changes state).

6. Turn Differential adjustor to full clockwise position (maximum differential).

7. Raise material level to upper point of desired control band.
8. Slowly turn the Differential adjustor counter-clockwise until the Red LED changes state.

9. Select desired Fail-Safe position.

Calibration is Complete

3.3.6 High Level Fail Safe Blind Calibration of Control w/Flush Sensing Element (Alarm when chute is full at sensor)

1. Start with sensing element uncovered, (no material at sensing element), and tuning SetPoint adjustment to the full counter-clockwise (ccw) position. At this point Red LED will be ON.

2. Turn SetPoint adjustor clockwise until the Red LED just turns OFF.

3. Test unit by turning SetPoint adjustor slowly counter-clockwise, then clockwise (cw) to determine differential of the electronics.

   If ON/OFF differential of LED is more than one quarter turn, unit is not operating correctly. Please consult factory service department for assistance. This is a simple function test of the electronics.

4. If above operation is satisfactory, then continue turning SetPoint adjustor clockwise:

- One (1) turn for granulars containing moisture. (1 = 4PF)
- One half (1/2) turn for dry insulating powders.

Calibration is Complete

3.3.7 Low Level Fail Safe Blind Calibration of Control w/Flush Sensing Element (Alarm when chute is empty at sensor)

1. Start with sensing element uncovered, (no material at sensing element), and tuning the SetPoint adjustor to full counterclockwise (ccw) position. Red LED will be OFF.

2. Turn the SetPoint adjustor clockwise (cw) until the Red LED just turns ON.

3. Test the unit by turning adjustor slowly counter-clockwise (ccw), then clockwise (cw) to determine differential of the electronics.

   If ON/OFF differential of LED is more than one quarter turn, unit is not operating correctly. Please consult factory service department for assistance. This is a simple function test of the electronics.

4. If above operation is satisfactory, then continue turning adjustor clockwise (cw):

- One (1) turn for granulars containing moisture. (1 = 4PF)

- One half (1/2) turn for dry insulating powders.

Calibration is Complete

NOTICE

When excessive build-up on sensor occurs, turning adjustor clockwise will generally eliminate a false high-level signal. Build-up may continue to form, or, it may drop off.

Section 4: Spare Parts List

4.1 Spare Parts List

O-ring 250-1-75

Housing ¾-Inch NPT Conduit Entry 260-2-540

Housing M20 Conduit Entry 260-2-542

Input/ Output Module 385-48-6

Input/ Output Module, Gold Relay 385-48-18

Circuit Board
RML - Manual Calibration (Std Sensitivity) 385-48-10-MT1
RGL - Manual Calibration (High Sensitivity) 385-48-20-GT1

Integral Sensing Element Cable (PEEK Probes) 380-9000-97
Integral Sensing Element Cable (All Other Probes) 380-9000-99

Section 5

5.1 RF Point Level Troubleshooting Guide

Symptom	Possible Cause	Solution	See Section
Switch is in alarm and will not clear	Sensor is coated by a conductive material and the Cote-Shield™ element does not extend far enough into the vessel	Need a sensor with a longer Cote-Shield element. Rule of thumb is nozzle length + expected wall coating + 2 inches.	Section 2.2, 5.4
	Fail Safe switch is set to the wrong setting	Check to make sure the fail safe switch is in the correct position	Section 2.6.3
	Active section of sensor is touching an internal structure or material is bridging active to ground.	May be able to shorten sensor (consult factory) or relocate sensor.	Appendix A Section 2.2, 5.4
	Connection cable or harness between unit and sensor is damaged	Check connection cable for shorts, opens, or damage and proper termination	Section 5.6, 5.5
	Flexible sensor is swaying and active is touching vessel or structure	Add 1 or 2 seconds of reverse acting time delay.	Section 2.6.2
Switch stays in alarm for extended period after level falls below sensor	Material bridging from active to tank structure	May be able to shorten sensor (consult factory) or relocate sensor.	Appendix A Section 2.2, 5.4
	Time delay may be active	Make sure time delay pot is full counterclockwise.	Section 2.6.2
Switch does not respond to material	There may not be enough active to detect an insulating material	Change to high sensitivity or adding active length to sensor	Consult Factory Section 4.8, App. A
	Switch was calibrated with sensor covered by material	Make sure material level is below sensor and re-calibrate	Section 2.6.7
	Granular material – Active section is not getting enough coverage due to angle of repose	Relocate sensor to get more coverage or lengthen active. Changing to high sensitivity may also help.	Appendix A
	Connection cable or harness between unit and sensor is damaged	Check connection cable for shorts, opens, or damage and proper termination	Section 5.5, 5.6
Switch delays in responding to material	Reverse acting time delay may be active	Check time delay settings to make sure they are correct	Section 2.6.2
LED's are Flashing	Flashing LED's indicate one of three things. Over Range / Under Range / fault	Consult instruction manual to determine which of the three symptoms are experienced.	Section 5.2, 5.3, 2.7
Over Range indicates that the standing capacitance of the sensing element in the vessel is to large to allow calibration	A long sensing element may generate too much standing capacitance to calibrate	Additional capacitance must be added to the calibration range (padding)	Section 5.7 Consult Factory
	The sensor could be touching an internal tank structure	May be able to shorten sensor (consult factory) or relocate sensor.	Appendix A
	Switch was calibrated with sensor covered by material	Make sure material level is below sensor and re-calibrate	Section 2.6.7
	Improper wiring connection (Remote Switches)	Check remote cable connections to confirm they are correct.	Section 2.8
Under Range indicates that the electronic unit is not seeing enough capacitance.	Sensing Element is Disconnected	Verify sensing element cable connections. Test cable continuity.	Section 5.5, 5.6
	Unit is damaged	Consult factory	Section 5.7
Fault Indicates the Auto-Verify feature has detected a problem.	Sensing Element is Damaged	Check Sensing Element for Damaged	Section 2.6.6
	Center wire to shield short	Check cable & sensor	Section 5.4, 5.5, 5.6
	Connecting Cable is Damaged	Check connection cable for damage, shorts, and proper termination	Section 5.5, 5.6
	Electronic Unit is damaged	Consult factory	Section 5.7
Green Power LED is out	Electronic unit is not getting power	Check power source to make sure proper power is supplied and connections are correct	Section 2.4
	Electronic Unit is damaged	Consult factory	Section 5.7

5.2 Testing The Electronic Unit

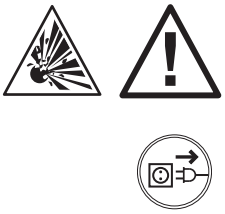

WARNING:
If the IntelliPoint instrument is located in a hazardous environment, do not open enclosure cover or make/break any electrical connections without first disconnecting electrical power at the source. Ensure that wiring, electrical fittings, and conduit connections conform to electrical codes for the specific location and hazard level.

This test is only a test of the electronic unit for troubleshooting purposes, and does not serve as a Verify or Certify test of the complete system.

Use the following steps to test the electronic unit:

1. Be sure the environment is safe before removing the lid from the housing.

2. If possible to access the sensing element with the material below the sensor, or remove the IntelliPoint from the vessel, use your finger to touch TP1 ***(Shown in Figure 2-4)*** while holding any bare metal portion of the instrument housing with the other hand. The system should go to its alarm state.

3. Again with no material touching the sensing element, touch the tip of the sensing element with your finger, while holding any bare metal portion of the instrument housing with the other hand. The system should go to its alarm state.

4. If the IntelliPoint changes to the alarm state while touching test point TP 1, but not when touching the tip of the sensor, in most cases, the interconnecting cable is faulty. ***See Section 5.5: Testing Integral Cable***

5. If the IntelliPoint changes state while touching test point, but not when touching tip of sensor, in most cases, integral cable is faulty. Refer to ***Section 5.5 Testing Integral Cable.***

6. If the IntelliPoint is stuck in one state:
   a. Remove power.
   b. Disconnect coax cable that joins sensing element to electronic unit.
   c. Apply power.
   d. Repeat steps 3 and 4.
   e. If IntelliPoint changes state with sensing element disconnected, in most cases, sensing element is faulty. Refer to ***Section 5.4 Testing Sensing Element.***

7. Disconnect probe cable form Circuit board.

8. Set time delay calibration deadband adjustment to full counter-clockwise position.
9. Turn calibration adjustment clockwise until the red LED changes.

5.2 Testing The Electronic Unit (Continued)

10. Turn calibration adjustment counter-clockwise until the Red LED changes again. If more than 1/3 turn is required then the unit is faulty.

11. If the IntelliPoint fails all of the above tests, in most cases the instrument is faulty. Use a replacement Input/Output Module (IOM) or circuit board to determine fault. Consult factory.

5.3 Testing the Relay Circuits

Use the following steps to check out the relay circuits:

A. Relay circuits consist of a single-pole double-throw relay contacts brought out to terminal strips for external switching. See ***Figure 5-2.***

B. Relay operation may generally be heard as an audible click when background noise is not too high. Connect ohmmeter to relay contacts to determine if they are switching.

C. Move the fail safe jumper to th eopposite position. The red LED will change and relay contacts should also change. If the contacts do not change, the relay is not functioning properly.

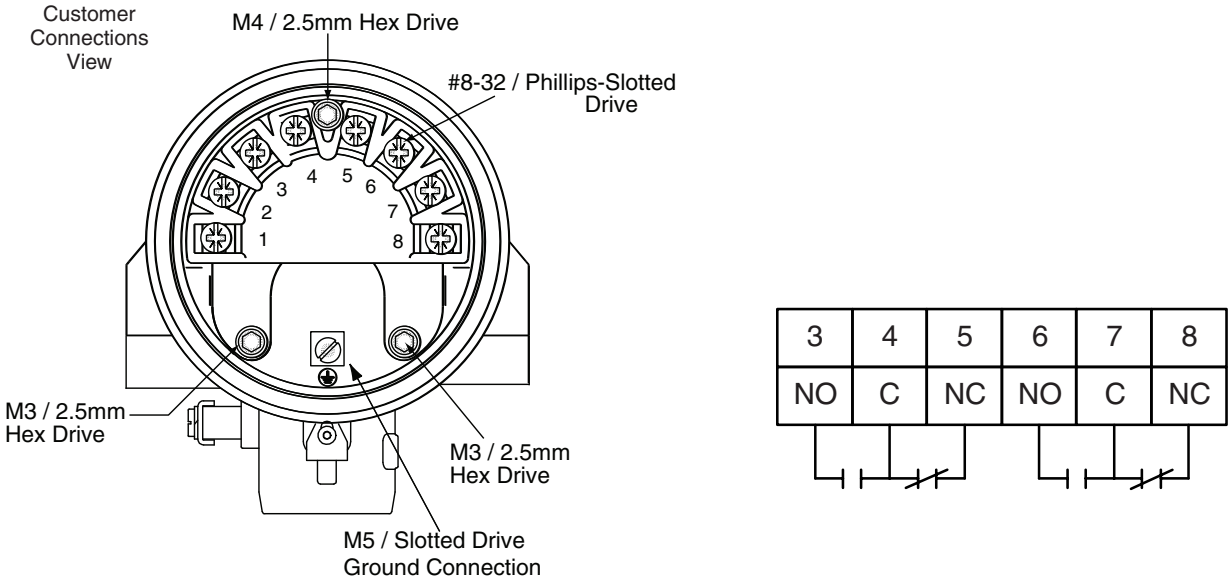

Figure 5-2
Relay Circuit Operation

5.4 Testing The Sensing Element

Integral electronics, *See figure 2-6*
Remove Sensing Element Circuit Board and disconnect cable from circuit board

Remote electronics, *See figure 2-7*
Disconnect remote cable at the sensing element.

1. With the sensing element in the vessel, verify level is below the sensing element
2. Use an analog ohmmeter[1] that is set to the R x 1K ohm scale, measure the resistances between each pair of sensing element connections. ***See Figure 5-6 & 5-7***. Record values in Table 5.1
   a. If the process material is conductive, it is normal to measure some resistance between sensing element connections. The lowest permissible resistance values are:

Center Wire to Ground	1000 ohms.
Center Wire to Shield	600 ohms.
Cote Shield to Ground	300 ohms.

   b. If all measurements are open circuit the sensing element has passed the test. If lower resistance was measured continue with testing.
3. Clean sensing element and repeat resistance measurements with the sensing element external to the vessel.
   a. A clean sensing element should measure an open circuit on all resistance tests.
   b. If resistance values increase to an open circuit the resistance was installation or coating related. The most common causes are:
      i. Cote Shield element does not extend sufficiently into the vessel. Verify the CoteShield element extends at least 2" into the vessel and past wall build-up.
      ii. Extremely conductive coating on the sensing element. This may require changing the sensing element or electronics. Contact the factory for recommendations.
      iii. Sensing element is touching vessel. A resistance reading of less than 10 ohms to ground (sensing element housing or tank) is usually due to a metal-to- metal short circuit. Verify that the sensing element is not touching any vessel structure.
   c. If the sensing element still shows resistance between terminals of less than 10K ohms, it is possible that moisture is present internal to the sensing element. It may be possible to dry the sensing element until the resistance increases to a value in excess of 10K ohms. However this is an indication the integrity of the sensing element has been compromised. Contact the factory for recommendations.

5.4 Testing The Sensing Element (Continued)

[1] A digital ohmmeter will often produce a resistance measurement that is higher than the actual value.

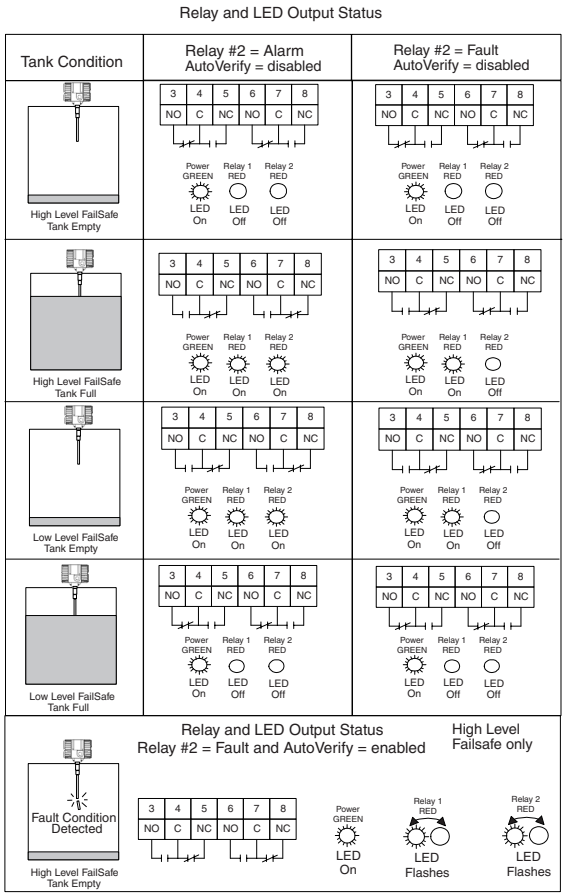

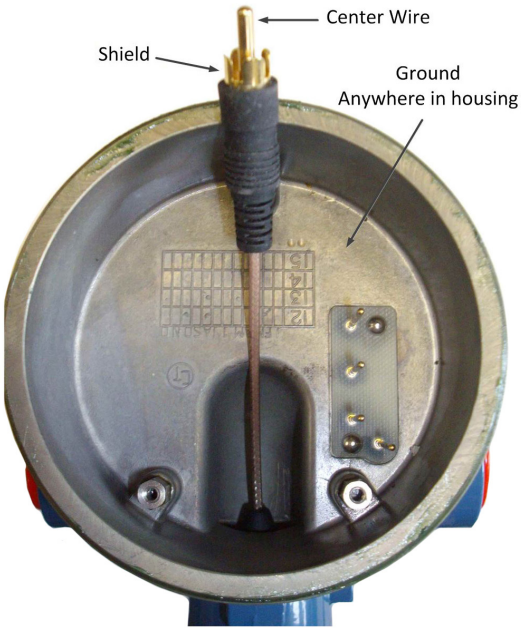

Figure 5-3
Checking the Sensing Element

5.4 Testing The Sensing Element (Continued)

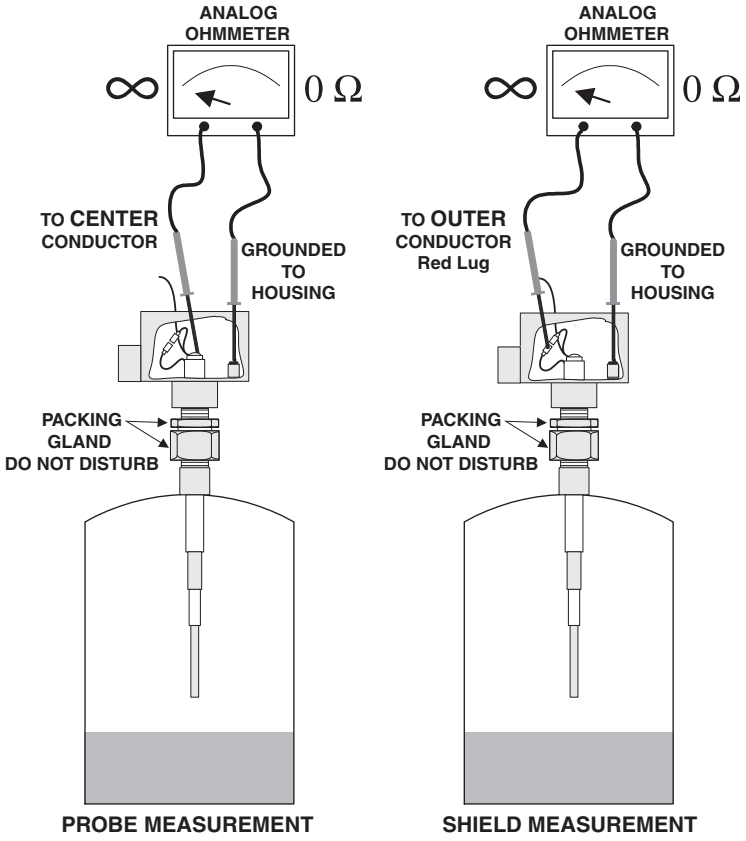

Figure 5-4
Checking the Sensing Element
Center = Probe
Outer = Shield
Housing = Ground

Sensing Element in Vessel

Center Conductor to Housing	_____	Ohms
Center Conductor to Cote Shield	_____	Ohms
Cote Shield to Housing	_____	Ohms

Sensing Element Cleaned

Center Conductor to Housing	_____	Ohms
Center Conductor to Cote Shield	_____	Ohms
Cote Shield to Housing	_____	Ohms

Table 5-1

5.5 Testing the Integral Cable

1. Disconnect integral cable from electronic.

2. Check for continuity.
   a. Using an ohmmeter measure the resistances.
      i. From the center wire connection on the RCA plug to the sensing element active section (center wire)
      ii. From the shield connection on the RCA plug to the sensing element shield.
      iii. If resistance is greater than 5Ω the cable has failed.

3. Check for shorts.
   a. The integral cable is tested as part of sensing element test,

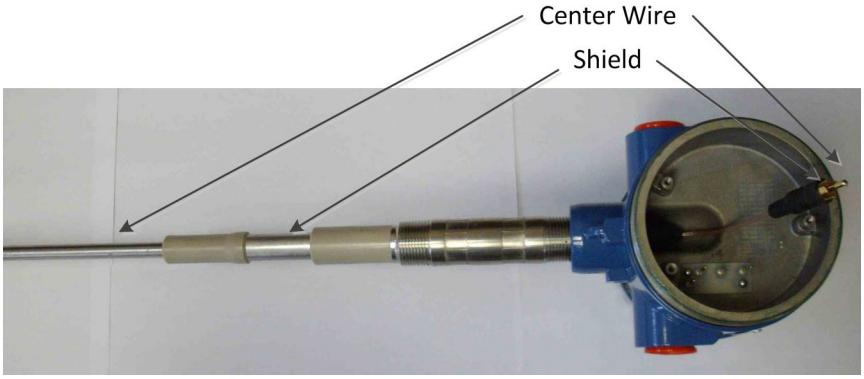

Figure 5-5
Testing Integral Cable

5.6 Testing Power Supply

Power supply can be tested separately as follows:

A. Remove power from electronic unit.

B. Remove three screws holding circuit board into housing.

C. Disconnect sensing element connection. Refer to ***Figure 2-6 or 2-7.***

D. Reapply power.

E. Using a DC voltmeter, measure voltage from -5 to Common and +5 to Common. Correct readings are -5 to -6 and +5 to +6 Vdc. See ***Figure 5-6.***

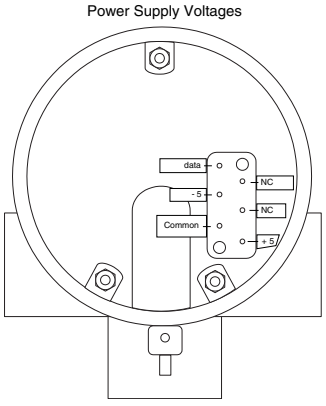

Figure 5-6
Testing Power Supply

VIEW INTO CUSTOMER CONNECTIONS SIDE

5.7 Factory Assistance

AMETEK Drexelbrook can answer any questions about your level measurement system. Call Customer Service +1-215-674-1234

If you require assistance and attempts to locate the problem have failed:

- **Contact** your local Drexelbrook representative
- **Call** the Service department +1-215-674-1234
- **FAX** the Service department at +1-215-443-5117
- **E-Mail** to drexelbrook.service@ametek.com

Please provide the following information:

- Instrument Model Number
- Sensing Element Model Number and Length
- Original Purchase Order Number
- Material being measured
- Temperature
- Pressure
- Agitation
- Brief description of the problem
- Checkout procedures that have failed

5.8 Field Service

Trained Field Service Engineers are available on a time-plus-expense basis to assist in start-ups, diagnosing difficult application problems, or in-plant training of personnel. Contact the service department for further details.

5.9 Customer Training

Periodically AMETEK Drexelbrook holds customer training seminars at the factory where the instruments are made. Guided by Drexelbrook engineers and specialists these sessions provide detailed information on all aspects of level measurement, from theory to the practice of instrument operation. For more information about these valuable workshops, call Customer Service at +1-215-674-1234.

5.10 Equipment Return

In order to provide the best service, any equipment being returned for repair or credit must be pre-approved by the factory.

In many applications, sensing elements are exposed to hazardous materials.

- OSHA mandates that our employees be informed and protected from hazardous chemicals.

- Material Safety Data Sheets (MSDS) listing the hazardous materials to which the sensing element has been exposed MUST accompany any repair.

- It is your responsibility to fully disclose all chemicals and decontaminate the sensing element.

To obtain a Return Authorization Number (RA#), contact the Service department at +1-215-674-1234.

Please provide the following information:

- Model Number of Return Equipment
- Serial Number
- Original Purchase Order Number
- Process Materials to which equipment has been exposed.
- MSDS sheets for any hazardous materials

- Billing Address
- Shipping Address
- Purchase Order Number for Repairs

Please include a purchase order even if the repair is under warranty. If repair is covered under warranty, you will not be charged.

Ship equipment freight prepaid to:
AMETEK-DREXELBROOK.
205 KEITH VALLEY ROAD
HORSHAM, PA 19044-1499

COD shipments will not be accepted.

Section 6: Specifications

Technology:	RF/Capacitance
Calibration:	None
Modes of Operation:	High and Low level
Repeatability:	2mm (0.08 inch) conductive liquids
Response Time:	Less than 1 second
Time Delay:	0 to 60 seconds forward and reverse acting
Ambient Electronics:	-30 to 70°C (-28 to 158°F) ATEX/IECEx -40 to 70°C (-40 to 158°F) FM/FMc
Storage Temperature:	-40 to 85°C (-40 to 185°F)
Indicators:	LEDs: Green Power, Red Alarm Status
Self-Check:	Manual Certify
Power Supply:	13 to 30 VDC *Note: The minimum supply voltage at the transmitter terminal is:* 13 VDC at 22mA (Fault) 19 VDC at 5mA (Fault)
Power Consumption:	1 watt maximum
Output:	8 mA - Alarm 16 mA - Normal 22 mA - Fault (or field-selectable) 8 mA - Normal 16 mA - Alarm 5 mA - Fault
Housing (Electronics):	Dual Compartment, powder-coated aluminum with two cable entries
Cable Entry:	M20 x 1.5 ATEX/IECEx ¾-inch NPT FM/FMc
Ingress Protection:	IP66 NEMA 4X

Section 6: Specifications (Continued)

Approvals

Explosion-proof for use in Class I, Division 1, Groups A, B, C, and D, Dust-Ignition proof for use in Class II and III, Division 1, Groups E, F, and G; Non-incendive for use in Class I, Division 2, Groups A, B, C, and D; Suitable for use in Class II and III, Division 2, Groups F and G Hazardous (Classified) Indoor and Outdoor (Type 4, 4X, IP66) Locations with Intrinsically Safe connections to Class I, II, and III, Division 1, Groups A, B, C, D, E, F, and G Hazardous (Classified) locations in accordance with control drawing 420-0004-173-CD; Intrinsically Safe for use in Class I, II, and III, Division 1, Groups A, B, C, D, E, F, and G hazardous (Classified) locations in accordance with entity requirements and control drawing 420-0004-173-CD.

ATEX (FM14ATEX0049X)

Integral

II 1 G Ex ia IIC T5... T2 -30°C ≤ TAMB ≤ +70°C; IP66
II 1 D Ex ia IIIC T90°C -30°C ≤ TAMB ≤ +70°C; IP66

Temperature Class	Process Temperature
T5	100°C
T4	135°C
T3	200°C
T2	230°C

Remote

II 1 G Ex ia IIC T5... T2 -30°C ≤ TAMB ≤ +70°C; IP66
II 1 D Ex ia IIIC T90°C -30°C ≤ TAMB ≤ +70°C; IP66

IECEX (FTZU 18.0007X)

Ex ia IIC T5 Ga
Ex ia IIIC T90ºC Da
-30ºC ≤ Ta ≤ 70ºC

CE 2460

Reference control drawing 420-0004-562-CD for entity and installation requirements

Special Condition for Safe Use

1. THE EQUIPMENT SHALL NOT BE APPLIED IN AN EXPLOSIVE DUST ATMOSPHERE WHERE HIGH ELECTROSTATIC CHARGING PROCESSES ARE PRESENT THAT COULD RESULT IN PROPAGATING BRUSH DISCHARGES.
2. CONSULT THE MANUFACTURER IF DIMENSIONAL INFORMATION ON THE FLAMEPROOF JOINTS IS NECESSARY.
3. AMBIENT TEMPERATURE RANGE:
-30°C TO +58°C FOR RXLX/SXRXTX INTELLIPOINT RF LEVEL SYSTEM
-30°C TO +70°C FOR RXTX/SXRXTX INTELLIPOINT RF TWO-WIRE POINT LEVEL SYSTEM

Section 7

Section 7: Drawings / Certificates

7.1 FM Control Drawings

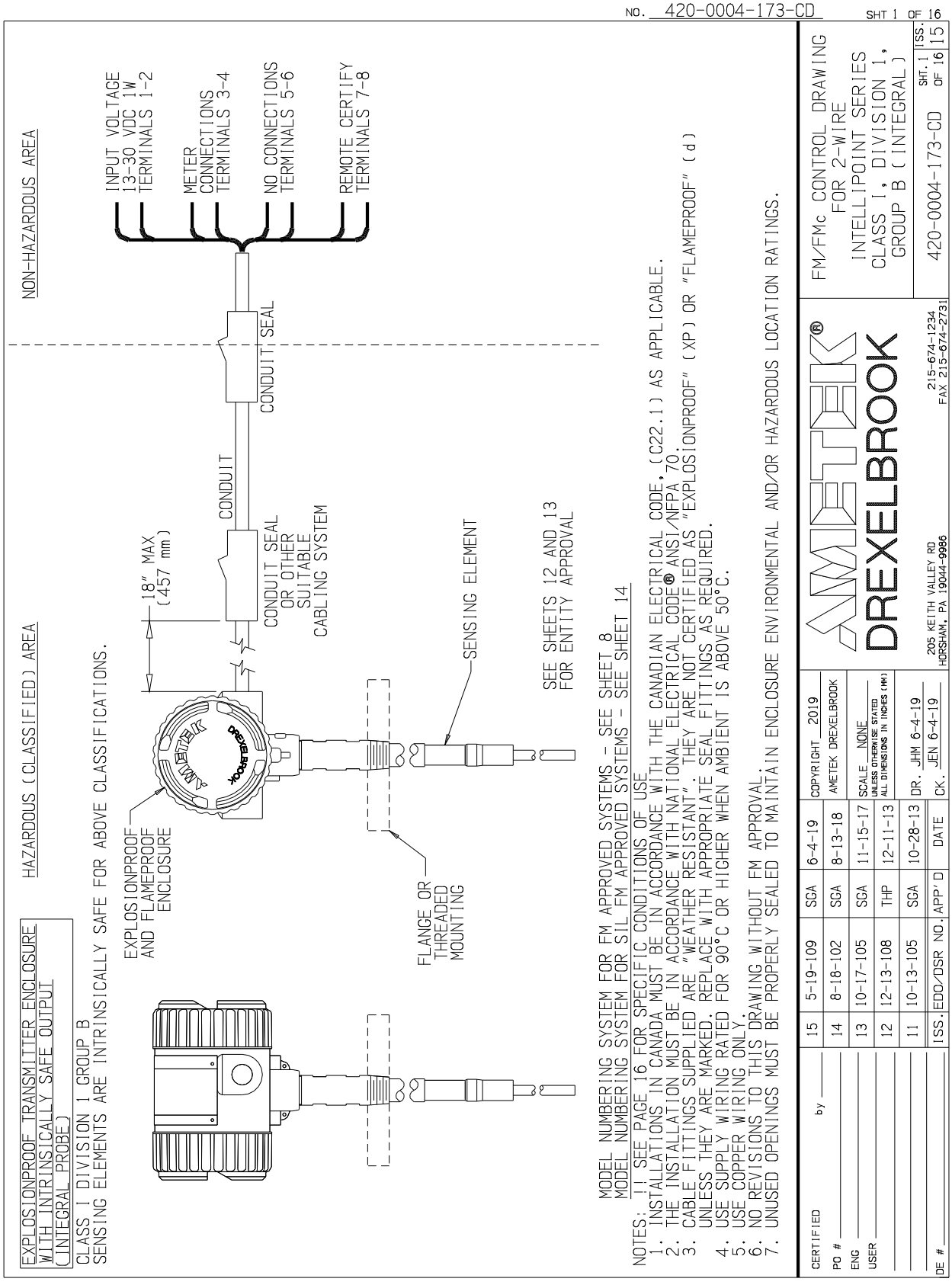

7.1 FM Control Drawings (Continued)

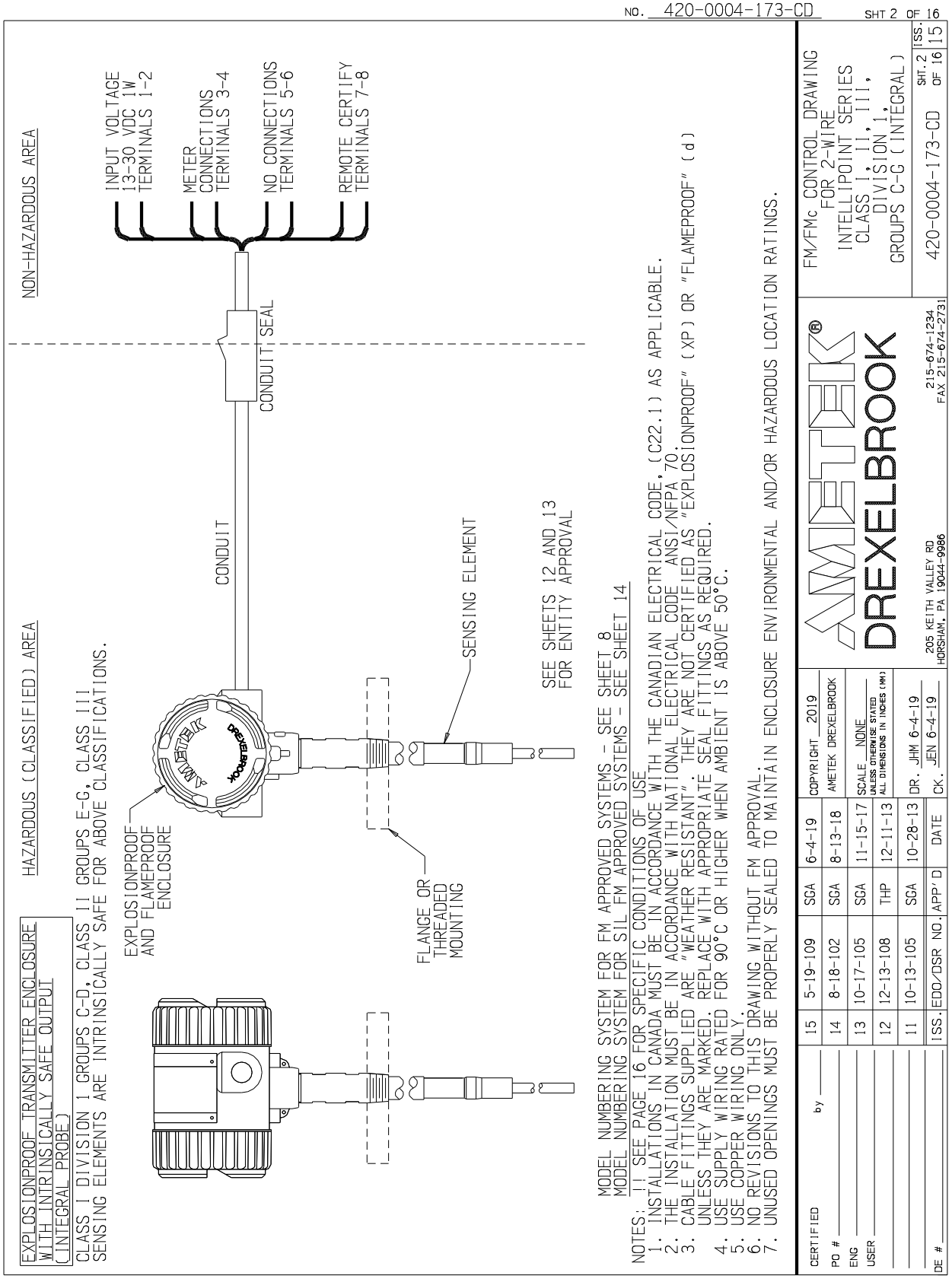

7.1 FM Control Drawings (Continued)

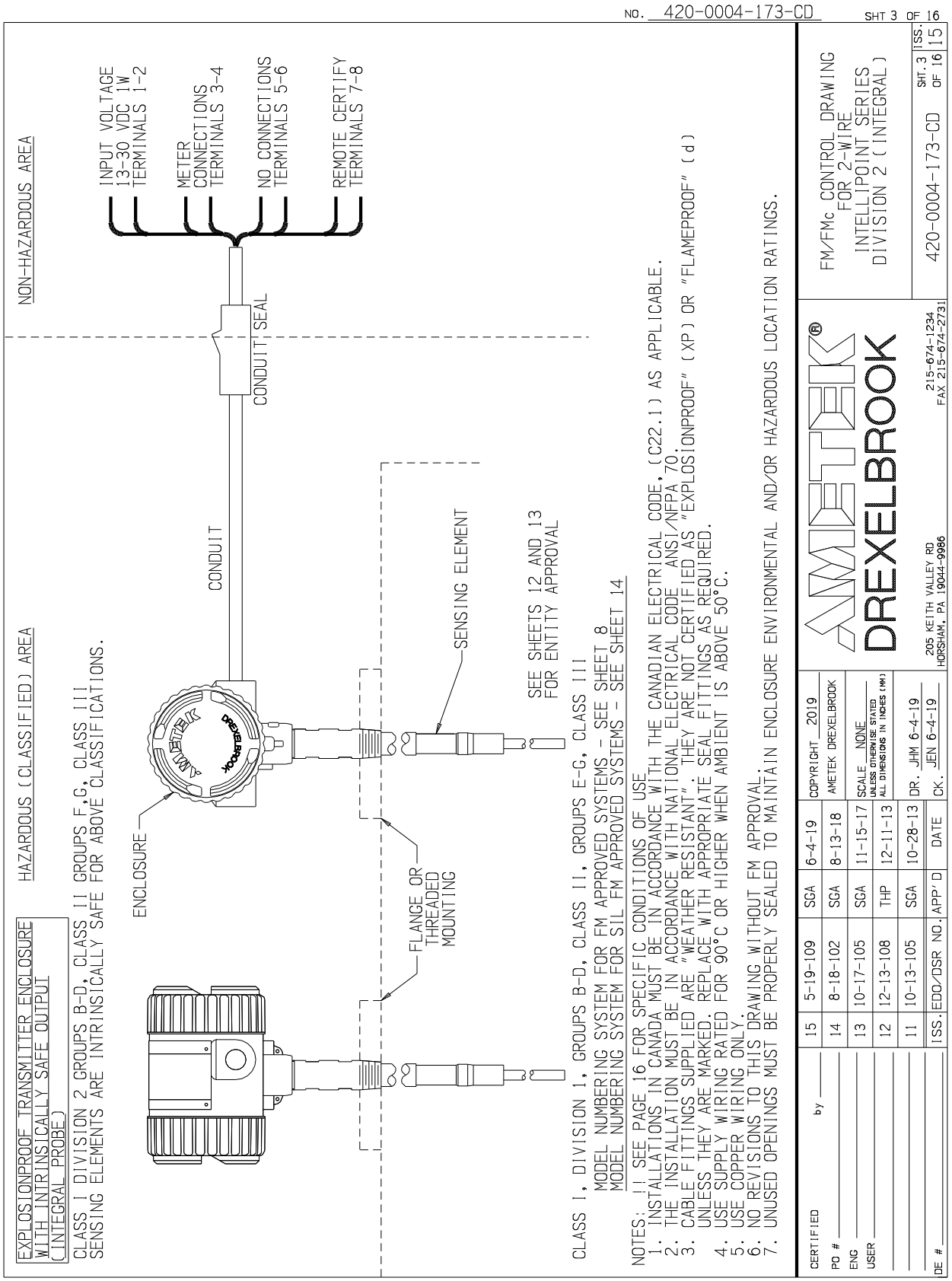

7.1 FM Control Drawings (Continued)

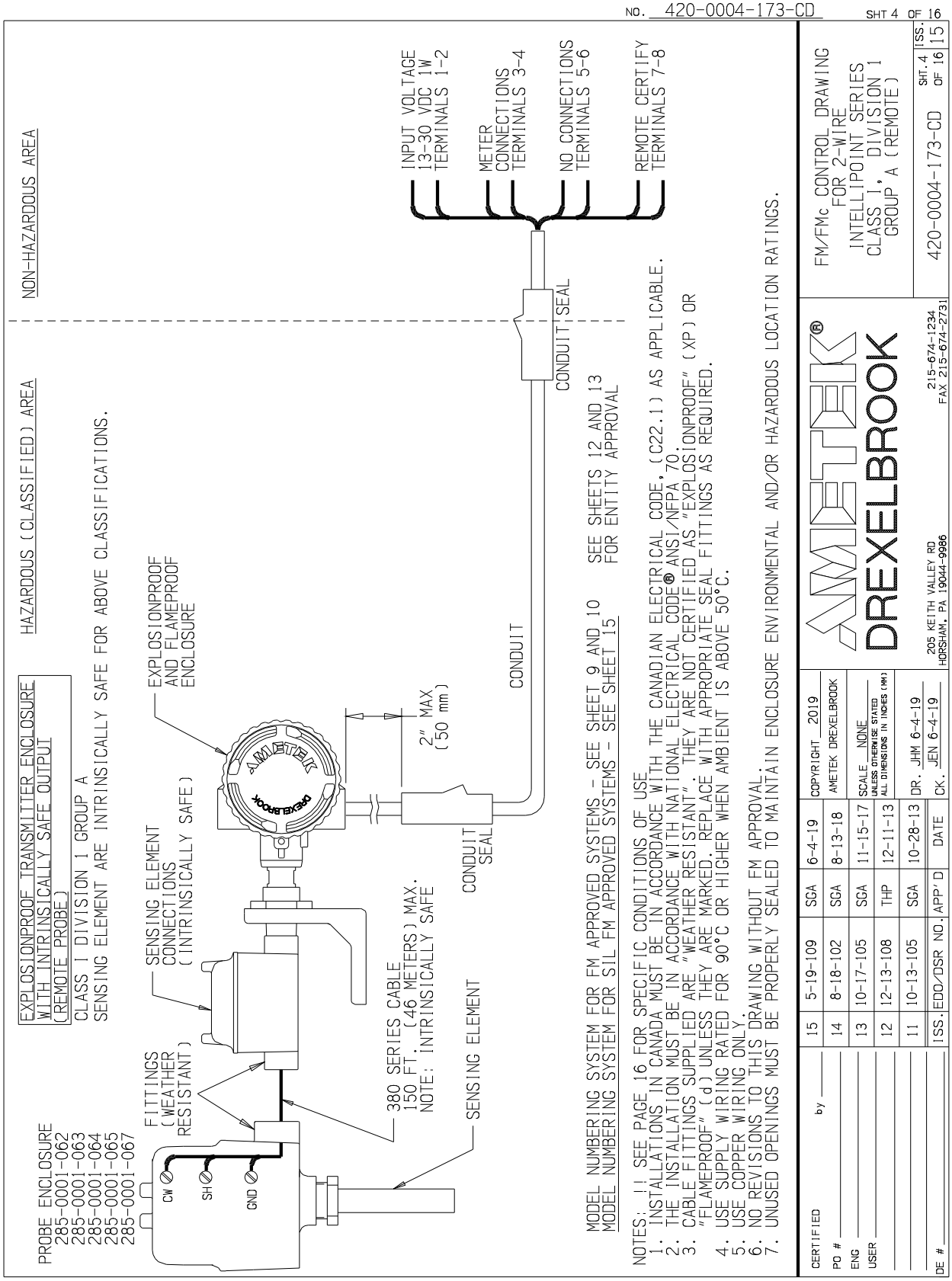

7.1 FM Control Drawings (Continued)

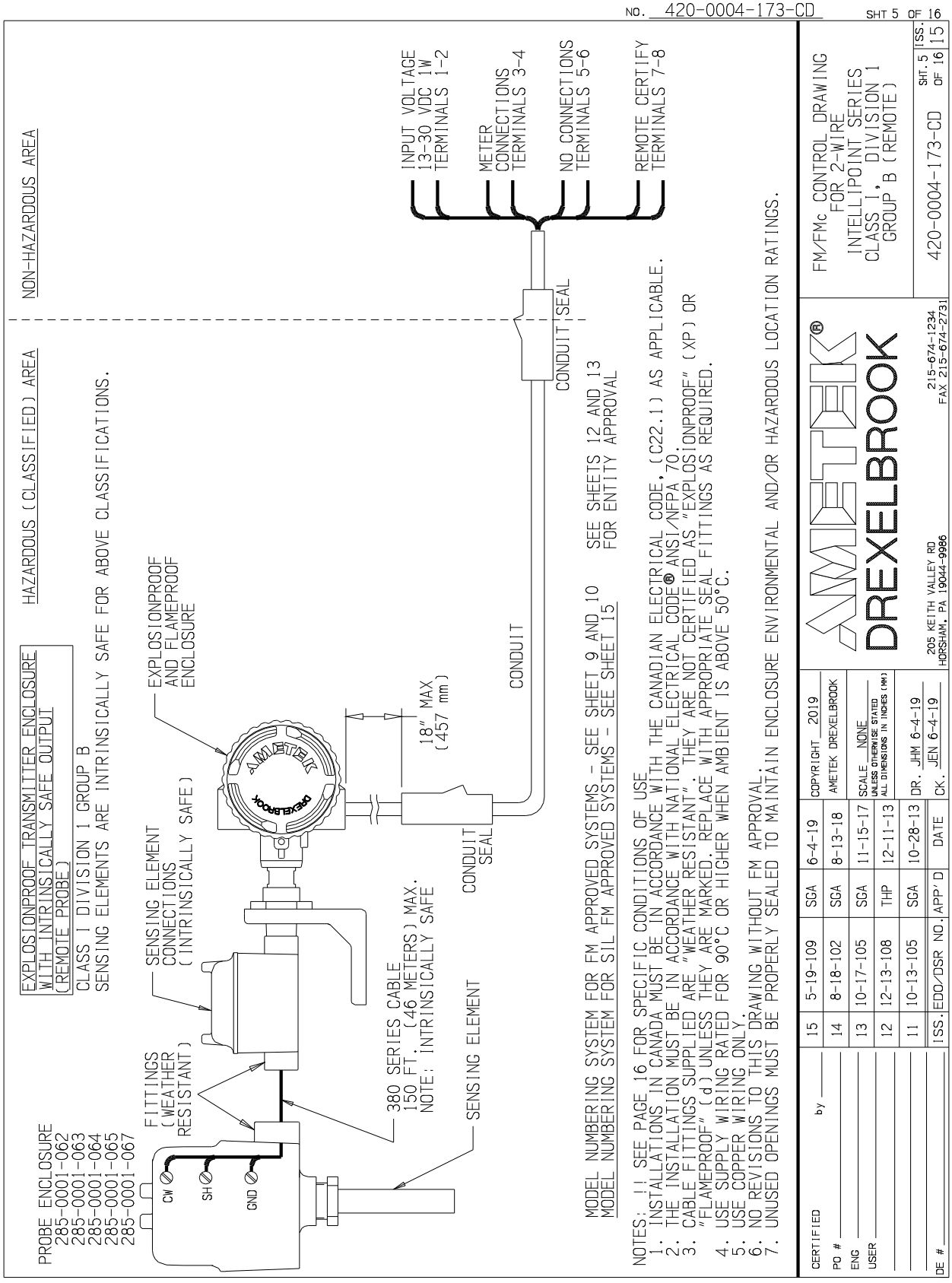

7.1 FM Control Drawings (Continued)

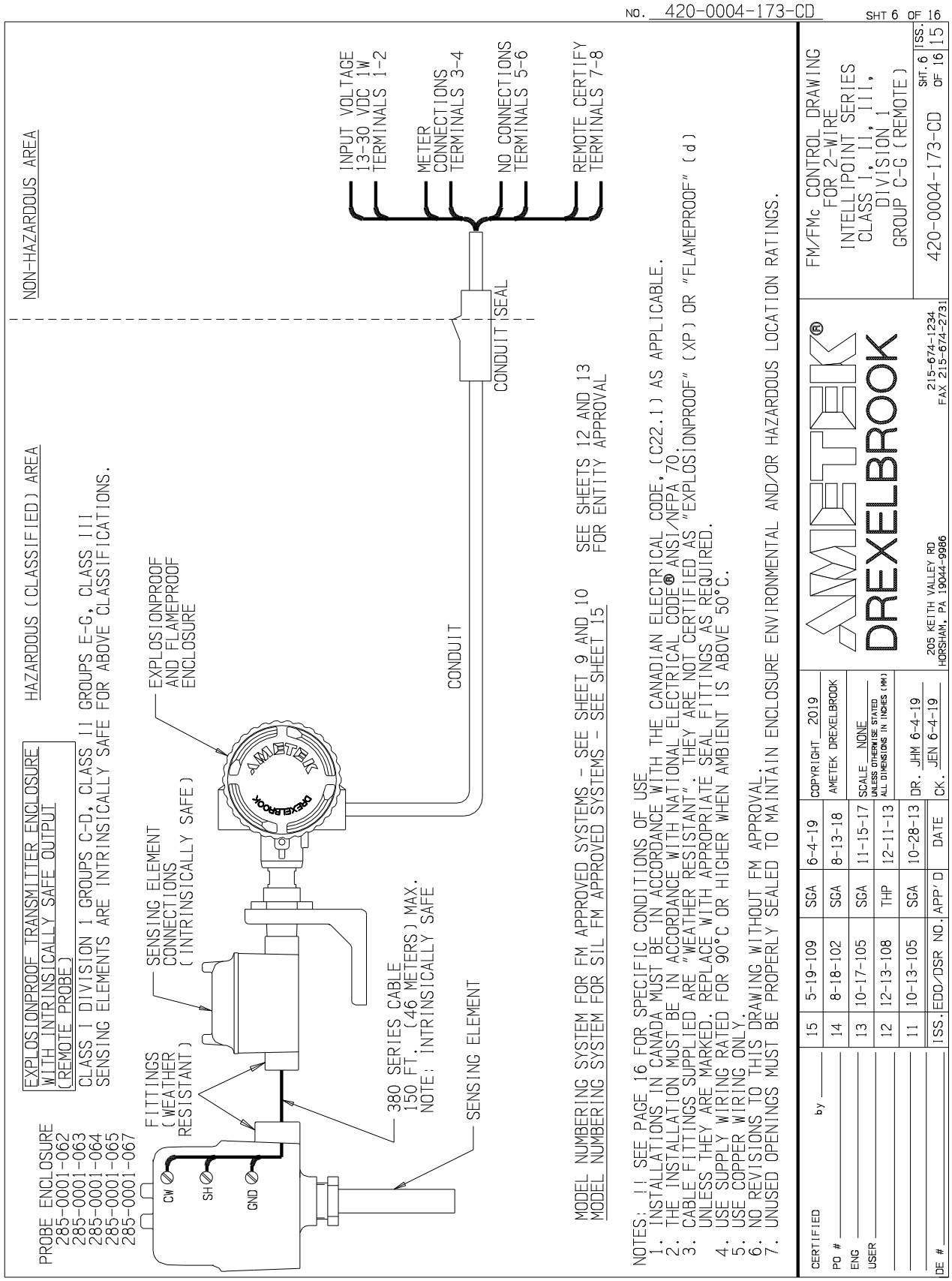

7.1 FM Control Drawings (Continued)

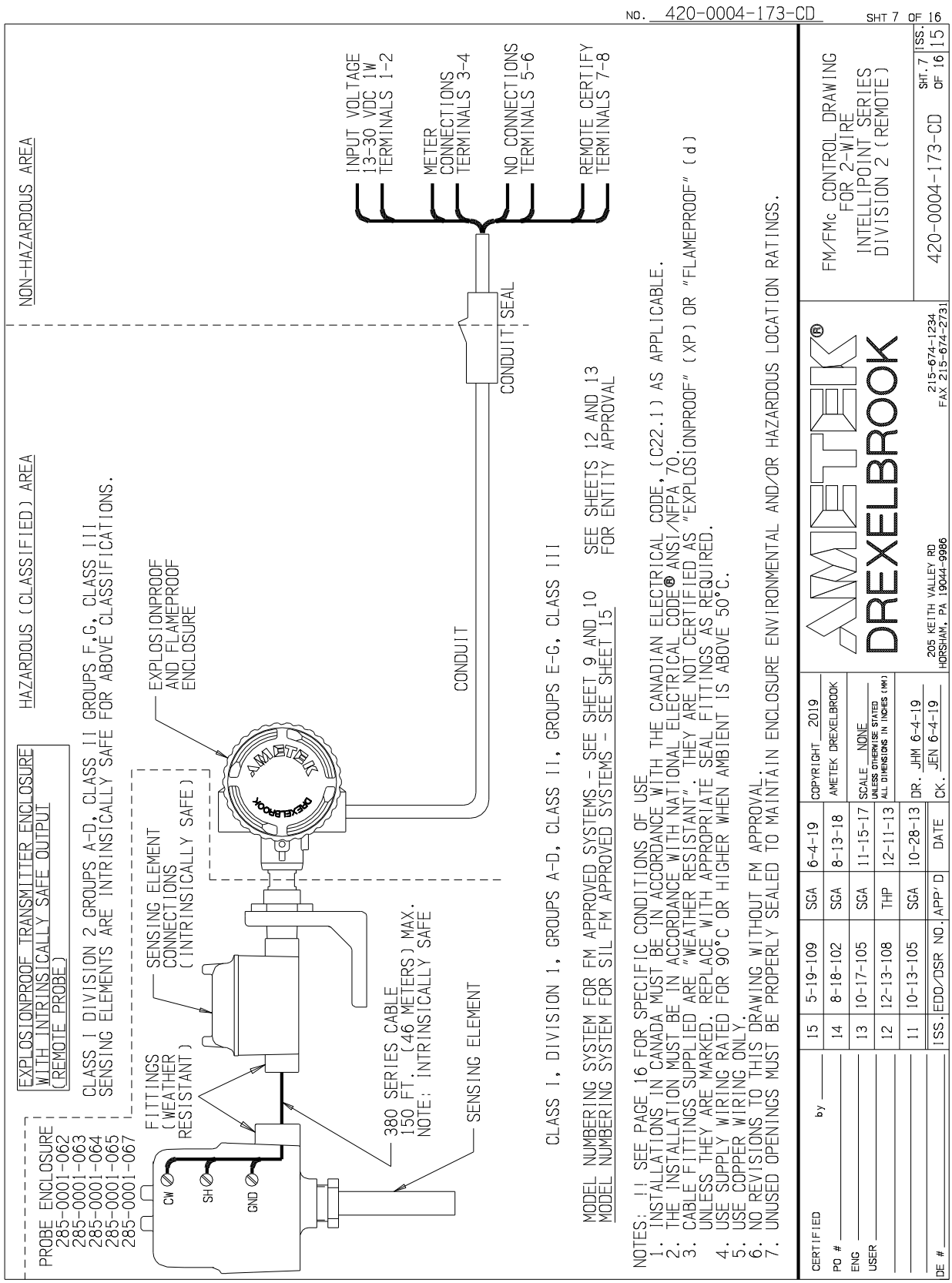

7.1 FM Control Drawings (Continued)

									COLUMNS 9 AND UP, DO NOT AFFECT SAFETY					
1	2	3	4	-	5	6	7	8	-	9	10	11	12	
R	a	T	b	-	0	0	c	d	-	*	*	*	*	
	a													a = MEASUREMENT OPTIONS:
														N = 2 pF AUTO-CAL
														M = MANUAL-CAL (STANDARD SENSITIVITY)
														H = 0.5 pF AUTO-CAL (HIGH SENSITIVITY)
														G = MANUAL-CAL (HIGH SENSITIVITY)
														L = 2 pF FIXED
														T = 10 pF AUTO-CAL
														V = 10 pF FIXED
														P = 0.5 pF FIXED (HIGH SENSITIVITY)
														R = (HIGH SENSITIVITY)
			b											b = OPTIONS
														3 = FM/FMc APPROVAL, 3/4 NPT HOUSING
														7 = FM/FMc APPROVAL, DUAL SEAL
														B = FM/FMc APPROVAL, DUAL SEAL
							c	d						c, d = SENSING ELEMENTS: 00, 02, 03, 04, 06, 07, 09, 11-19,
														21, 22, 24, 25, 28, 72, 73, 86, 87, 90-93, NN, or ZZ.
							0	0						700-1202-021
								2						700-1202-024
								3						700-1202-028
								4						700-1202-042
								6						700-1202-032
								7						700-1202-020
								9						700-1202-034
							1	1						700-0201-005
								2						700-0201-005 (HAST C)
								3						700-0201-019
								4						700-0202-002
								5						700-0202-043
								6						700-0002-360
								7						700-0202-029
								8						700-0001-022
								9						700-0002-023
							2	1						700-0202-043 (HAST-C)
								2						700-0202-044
								4						700-0005-485
								5						700-0005-485 (HAST-C)
								8						700-1202-052
							6	7						700-3201-002 ⟨15⟩
							7	2						700-0201-027
								3						700-0201-028
							8	6						700-0005-594
								7						700-0005-595
							9	0						700-0201-059
								1						700-1202-016
								2						700-1202-046
								3						700-1202-056
							N	N						RETROFIT KIT 285-0001-671
							Z	Z						SEE SHEET 11 FOR LIST OF OTHER APPROVED SENSING ELEMENTS

FM/FMc APPROVED
INTEGRAL, 2-WIRE, INTELLIPOINT
MODEL NUMBERING SYSTEM
SHT 8 OF 16
420-0004-173-CD ISS. 15

7.1 FM Control Drawings (Continued)

									COLUMNS 9 AND UP, DO NOT AFFECT SAFETY					
1	2	3	4	-	5	6	7	8	-	9	10	11	12	
R	a	T	b	-	c	0	d	e	-	*	*	*	*	
	a													a = MEASUREMENT OPTIONS:
														N = 2 pF AUTO-CAL
														M = MANUAL-CAL (STANDARD SENSITIVITY)
														H = 0.5 pF AUTO-CAL (HIGH SENSITIVITY)
														G = MANUAL-CAL (HIGH SENSITIVITY)
														L = 2 pF FIXED
														T = 10 pF AUTO-CAL
														V = 10 pF FIXED
														P = 0.5 pF FIXED (HIGH SENSITIVITY)
			b											b = OPTIONS
														3 = FM/FMc APPROVAL, 3/4 NPT HOUSING
														7 = FM/FMc APPROVAL, DUAL SEAL
														B = FM/FMc APPROVAL, DUAL SEAL
					c									c = 1-9, A-K CABLE OPTIONS, REMOTE
							d	e						d, e = SENSING ELEMENTS: 00, 02, 03, 04, 06, 07, 09-22, 24, 25-28,
														31-40, 50-53, 55, 60-62, 64, 66, 72, 73, 80-83, 85, 90-94, NN or ZZ.
							0	0						700-1202-001
								2						700-1202-014
								3						700-1202-018
								4						700-1202-041
								6						700-1202-031
								7						700-1202-010
								9						700-1202-033
							1	0						700-0001-018
								1						700-0201-005
								2						700-0201-005 (HAST C)
								3						700-0201-019
								4						700-0202-002
								5						700-0202-043
								6						700-0002-360
								7						700-0202-029
								8						700-0001-022
								9						700-0002-023
							2	0						700-0209-002
								1						700-0202-043 (HAST-C)
								2						700-0202-044
								4						700-0005-285
								5						700-0005-285 (HAST-C)
								6						700-0220-001
								7						700-0221-002
								8						700-1202-051

SENSING ELEMENT LIST
CONTINUED ON NEXT PAGE

FM/FMc APPROVED
REMOTE, 2-WIRE, INTELLIPOINT
MODEL NUMBERING SYSTEM
SHT 9 OF 16
420-0004-173-CD ISS. 14

7.1 FM Control Drawings (Continued)

									COLUMNS 9 AND UP, DO NOT AFFECT SAFETY					
1	2	3	4	-	5	6	7	8	-	9	10	11	12	
R	a	T	b	-	c	0	d	e	-	*	*	*	*	
														SENSING ELEMENTS: CONTINUED…
							3	1						700-0029-001
								2						700-0029-002
								3						700-0029-003
								4						700-0029-004
								5						700-0029-005
								6						700-0029-102
								7						700-0029-103
								8						700-0029-104
								9						700-0029-105
							4	0						700-0029-106
							5	0						700-0207-001
								1						700-0207-002
								2						700-0207-003
								3						700-0207-004
								5						700-0207-006
							6	0						700-0204-038
								1						700-0204-002
								2						700-0204-048
								4						700-0204-024
								6						700-0204-022
								7						700-3201-001 ⟨15⟩
							7	2						700-0201-027
								3						700-0201-028
							8	0						700-4200-020
								1						700-4200-030
								2						700-4200-040
								3						700-4200-060
								5						700-9000-494
							9	0						700-0201-059
								1						700-1202-015
								2						700-1202-045
								3						700-1202-055
								4						700-0209-024
							N	N						RXXX-1XNN-NN-CD
							Z	Z						SEE SHEET 11 FOR LIST OF OTHER APPROVED SENSING ELEMENTS

FM/FMc APPROVED
REMOTE, 2-WIRE, INTELLIPOINT
MODEL NUMBERING SYSTEM
SHT 10 OF 16
420-0004-173-CD ISS. 15

7.1 FM Control Drawings (Continued)

MODEL NUMBERS OF APPROVED REMOTE SENSING ELEMENTS

700-mnop-qrs-t LEVEL PROBE

m = FAMILY NUMBER: 0 THROUGH 9, BLANK
n = FAMILY NUMBER: 0 THROUGH 9, BLANK
o = 0 THROUGH 9, BLANK
p = 0 THROUGH 9
q = FAMILY NUMBER: 0 THROUGH 9, BLANK
r = FAMILY NUMBER: 0 THROUGH 9, BLANK
s = FAMILY NUMBER: 0 THROUGH 9
t = 24 CHARACTER EXPANDED NUMBERING SYSTEM, DOES NOT AFFECT SAFETY

NOTES:
1. MAXIMUM PROCESS TEMPERTURE 290°C.
2. MAXIMUM SENSOR CAPACITANCE < 1µF.
3. MAXIMUM INSERTION LENGTH ***RIGID SENSOR*** 30 FEET (9.14 METERS).
4. MAXIMUM INSERTION LENGTH ***FLEXIBLE SENSOR*** 2000 FEET (609.6 METERS).
5. SENSING ELEMENT ENCLOSURE IP66 (IP RATING DOES NOT APPLY TO SPECIAL SENSORS SUPPLIED WITHOUT A 285- SERIES SENSING ELEMENT ENCLOSURE).

!! SEE PAGE 16 FOR SPECIFIC CONDITIONS OF USE

FM/FMc APPROVED
ADDITIONAL
SENSING ELEMENTS

SHT 11 OF 16
420-0004-173-CD ISS. 15

7.1 FM Control Drawings (Continued)

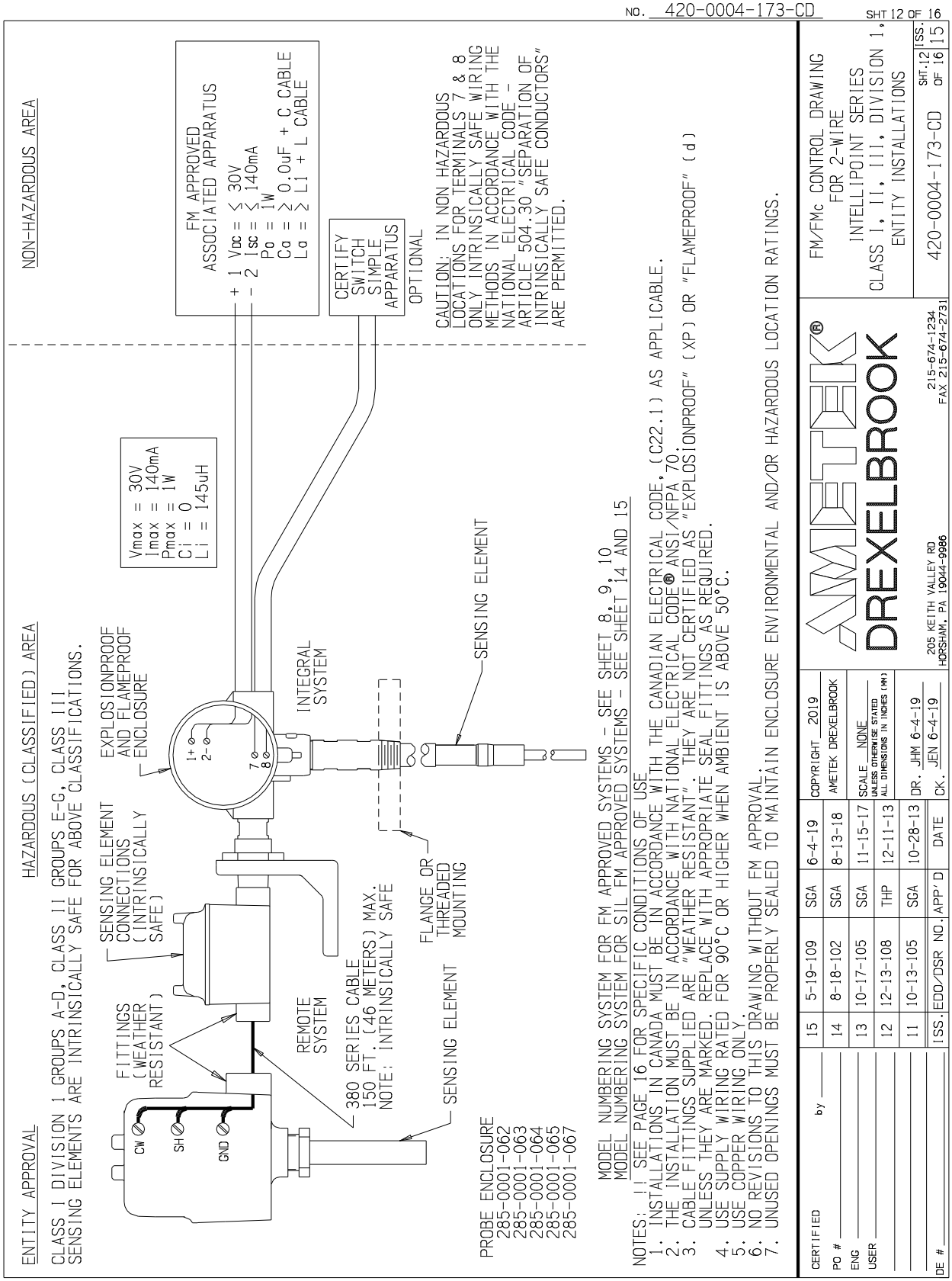

7.1 FM Control Drawings (Continued)

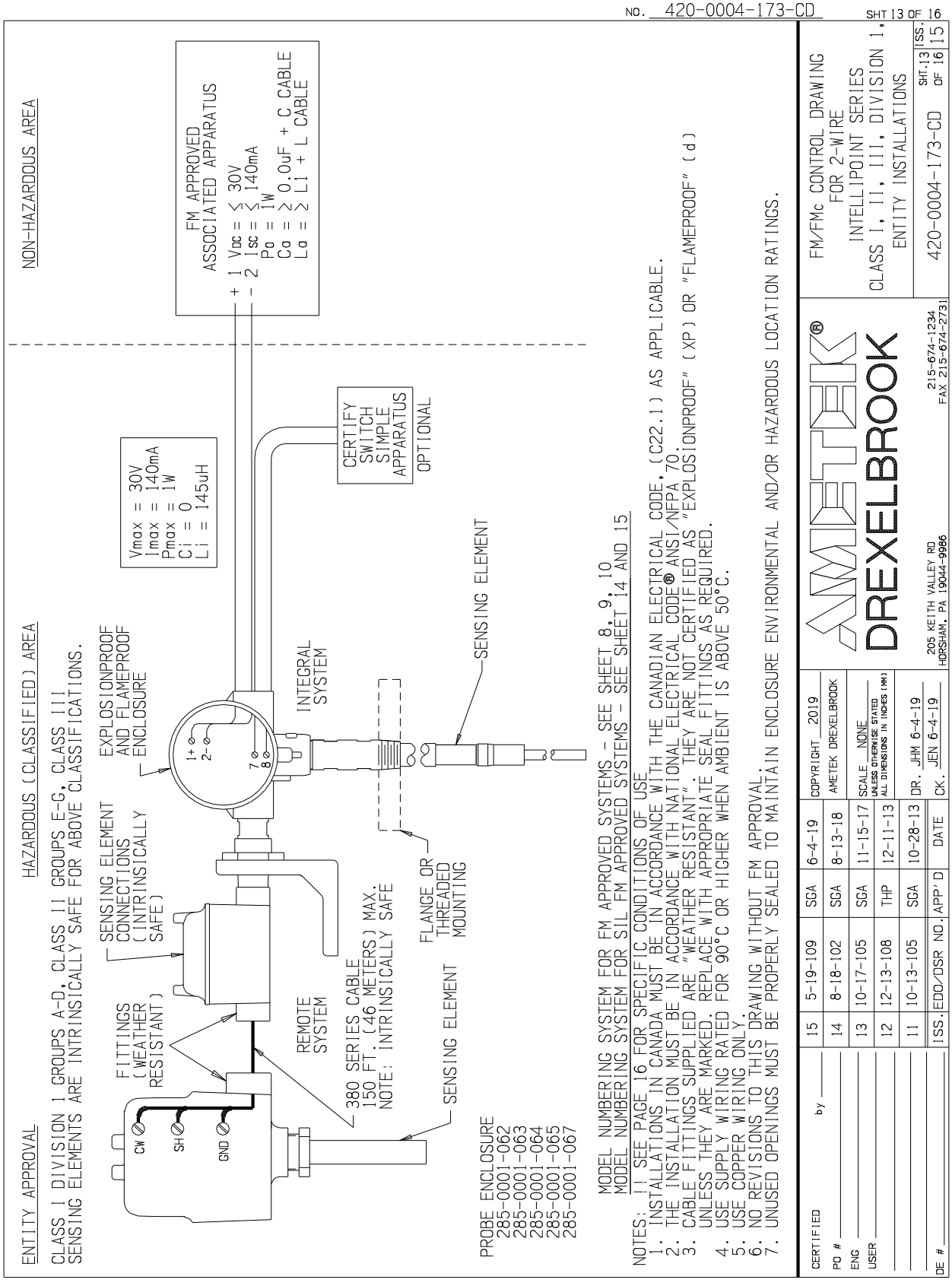

7.1 FM Control Drawings (Continued)

											COLUMNS 11 AND UP, DO NOT AFFECT SAFETY					
1	2	3	4	5	6	-	7	8	9	10	-	11	12	13	14	
S	a	R	b	T	c	-	0	0	d	e	-	*	*	*	*	
	a															a = 2 SIL LEVEL 2
			b													b = MEASUREMENT OPTIONS:
																N = 2 pF AUTO-CAL
																H = 0.5 pF AUTO-CAL (HIGH SENSITIVITY)
																L = 2 pF FIXED
																T = 10 pF AUTO-CAL
																V = 10 pF FIXED
																P = 0.5 pF FIXED (HIGH SENSITIVITY)
					c											c = OPTIONS
																3 = FM/FMc APPROVAL, 3/4 NPT HOUSING
																7 = FM/FMc APPROVAL, DUAL SEAL
																B = FM/FMc APPROVAL, DUAL SEAL
									d	e						d, e = SENSING ELEMENTS: 00, 02, 04, 06, 07, 09, 11-19,
																21, 24, 25, 28, 72, 73, 86, 87, 90-93.
									0	0						700-1202-021
										2						700-1202-024
										4						700-1202-042
										6						700-1202-032
										7						700-1202-020
										9						700-1202-034
									1	1						700-0201-005
										2						700-0201-005 (HAST C)
										3						700-0201-019
										4						700-0202-002
										5						700-0202-043
										6						700-0002-360
										7						700-0202-029
										8						700-0001-022
										9						700-0002-023
									2	1						700-0202-043 (HAST-C)
										4						700-0005-485
										5						700-0005-485 (HAST-C)
										8						700-1202-052
									6	7						700-3201-002 ⟨15⟩
									7	2						700-0201-027
										3						700-0201-028
									8	6						700-0005-594
										7						700-0005-595
									9	0						700-0201-059
										1						700-1202-016
										2						700-1202-046
										3						700-1202-056

Reference SIL Manual (SXRXT) For Ordering Detail

SIL, FM/FMc APPROVED
INTEGRAL, 2-WIRE, INTELLIPOINT
MODEL NUMBERING SYSTEM
SHT 14 OF 16
420-0004-173-CD ISS. 15

7.1 FM Control Drawings (Continued)

											COLUMNS 11 AND UP, DO NOT AFFECT SAFETY					
1	2	3	4	5	6	-	7	8	9	10	-	11	12	13	14	
S	a	R	b	T	c	-	d	0	e	f	-	*	*	*	*	
	a															a = 2 SIL LEVEL 2
			b													b = MEASUREMENT OPTIONS:
																N = 2 pF AUTO-CAL
																H = 0.5 pF AUTO-CAL (HIGH SENSITIVITY)
																L = 2 pF FIXED
																T = 10 pF AUTO-CAL
																V = 10 pF FIXED
																P = 0.5 pF FIXED (HIGH SENSITIVITY)
					c											c = OPTIONS
																3 = FM/FMc APPROVAL, 3/4 NPT HOUSING
																7 = FM/FMc APPROVAL, DUAL SEAL
																B = FM/FMc APPROVAL, DUAL SEAL
							d									d = 1-9, A-K CABLE OPTIONS, REMOTE
									e	f						e, f = SENSING ELEMENTS: 00, 02, 04, 06, 07, 09, 11-21, 24-28,
																60-62, 64, 66, 72, 73, 85, 90-94.
									0	0						700-1202-001
										2						700-1202-014
										4						700-1202-041
										6						700-1202-031
										7						700-1202-010
										9						700-1202-033
									1	1						700-0201-005
										2						700-0201-005 (HAST C)
										3						700-0201-019
										4						700-0202-002
										5						700-0202-043
										6						700-0002-360
										7						700-0202-029
										8						700-0001-022
										9						700-0002-023
									2	0						700-0209-002
										1						700-0202-043 (HAST-C)
										4						700-0005-285
										5						700-0005-285 (HAST-C)
										6						700-0220-001
										7						700-0221-002
										8						700-1202-051
									6	0						700-0204-038
										1						700-0204-002
										2						700-0204-048
										4						700-0204-024
										6						700-0204-022
										7						700-3201-001 ⟨15⟩
									7	2						700-0201-027
										3						700-0201-028
									8	5						700-9000-494
									9	0						700-0201-059
										1						700-1202-015
										2						700-1202-045
										3						700-1202-055
										4						700-0209-024

Reference SIL Manual (SXRXT) For Ordering Detail

SIL, FM/FMc APPROVED
REMOTE, 2-WIRE, INTELLIPOINT
MODEL NUMBERING SYSTEM
SHT 15 OF 16
420-0004-173-CD ISS. 15

7.1 FM Control Drawings (Continued)

SPECIFIC CONDITIONS OF USE

1. *"The equipment shall not be applied in an explosive dust atmosphere where high electrostatic charging processes are present that could result in propagating brush discharges. See IEC TS60079-32-1 for additional guidance."*
2. *The enclosure contains aluminum and is considered a potential risk of ignition by impact or friction. Care must be taken into account during installation and use to prevent impact or friction.*

SPECIFIC CONDITIONS OF USE
SHT 16 OF 16
420-0004-173-CD ISS. 15

7.2 ATEX Control Drawings

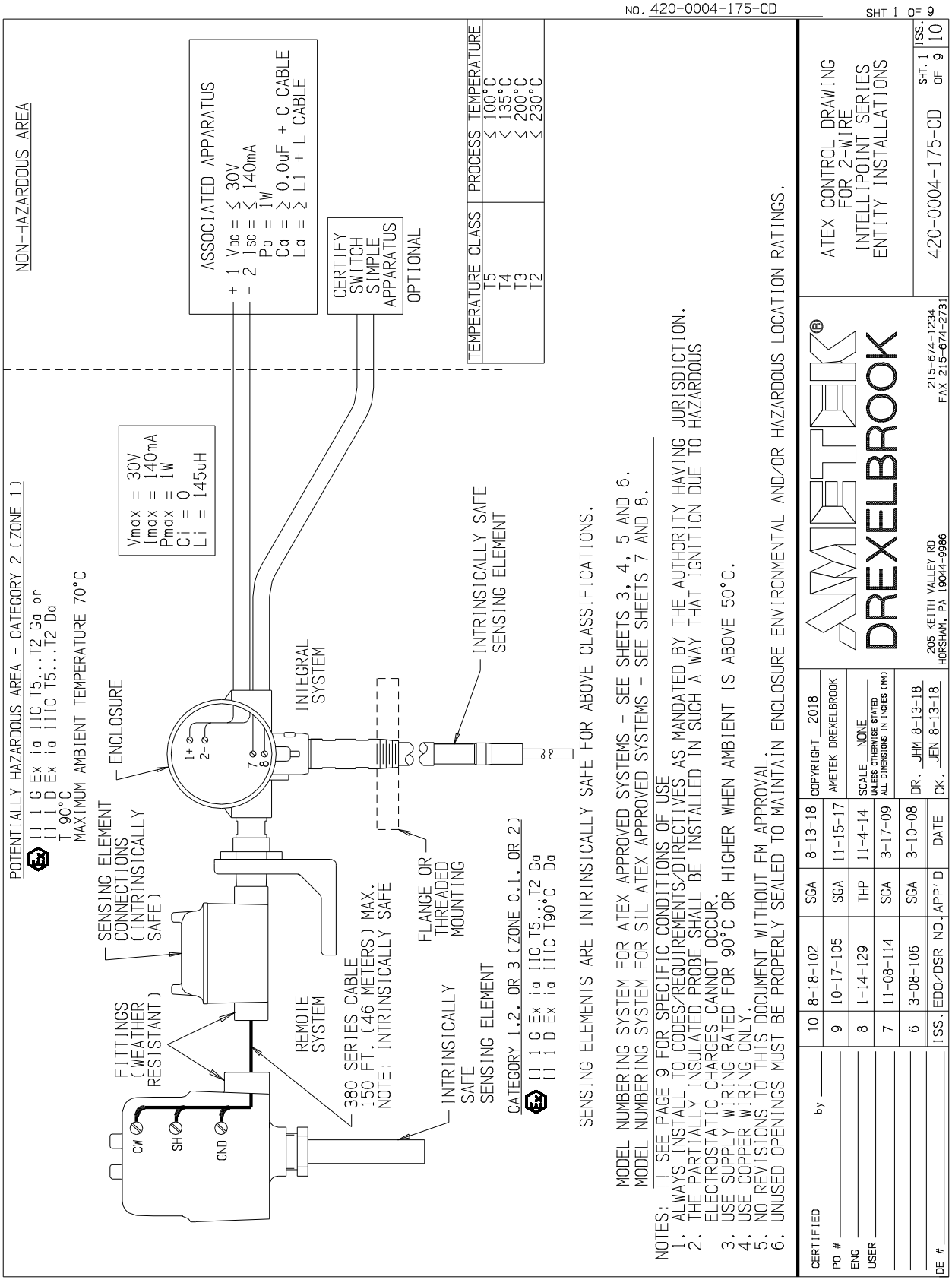

7.2 ATEX Control Drawings (Continued)

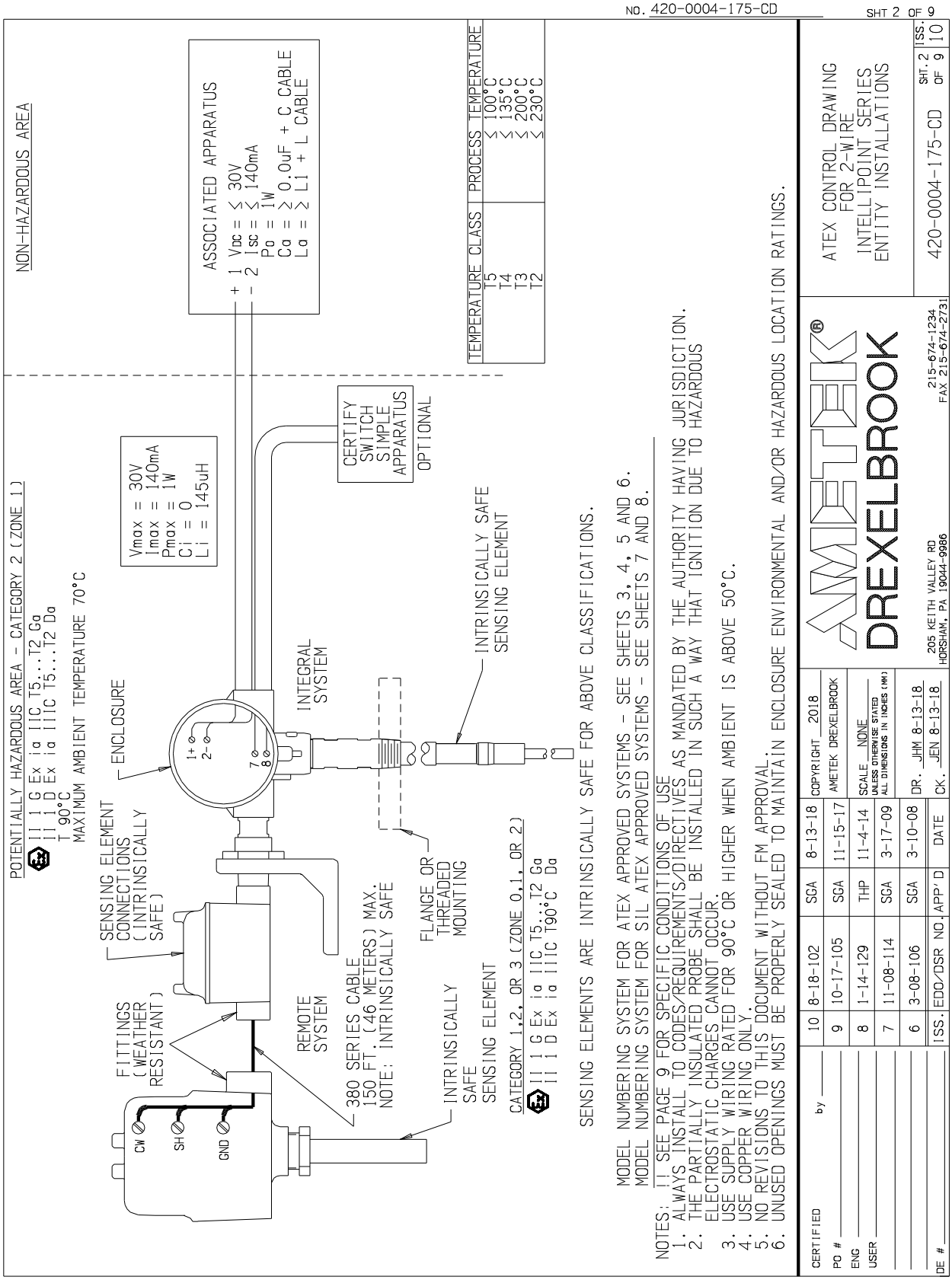

7.2 ATEX Control Drawings (Continued)

									COLUMNS 9 AND UP, DO NOT AFFECT SAFETY					
1	2	3	4	-	5	6	7	8	-	9	10	11	12	
R	a	T	2	-	0	0	b	c	-	*	*	*	*	
	a													a = MEASUREMENT OPTIONS:
														N = 2 pF AUTO-CAL
														M = MANUAL-CAL (STANDARD SENSITIVITY)
														H = 0.5 pF AUTO-CAL (HIGH SENSITIVITY)
														G = MANUAL-CAL (HIGH SENSITIVITY)
														L = 2 pF FIXED
														T = 10 pF AUTO-CAL
														V = 10 pF FIXED
														P = 0.5 pF FIXED (HIGH SENSITIVITY)
			2											2 = ATEX APPROVAL, M20 HOUSING
							b	c						b, c = SENSING ELEMENTS: 00, 02-04, 06, 07, 09, 11-19,
														21, 22, 24, 25, 28, 72, 73, 86, 87, 90-93, or ZZ.
							0	0						700-1202-021
								2						700-1202-024
								3						700-1202-028
								4						700-1202-042
								6						700-1202-032
								7						700-1202-020
								9						700-1202-034
							1	1						700-0201-005
								2						700-0201-005 (HAST C)
								3						700-0201-019
								4						700-0202-002
								5						700-0202-043
								6						700-0002-360
								7						700-0202-029
								8						700-0001-022
								9						700-0002-023
							2	1						700-0202-043 (HAST-C)
								2						700-1202-044
								4						700-0005-485
								5						700-0005-485 (HAST-C)
								8						700-1202-052
							7	2						700-0201-027
								3						700-0201-028
							8	6						700-0005-594
								7						700-0005-595
							9	0						700-0201-059
								1						700-1202-016
								2						700-1202-046
								3						700-1202-056
							Z	Z						SEE SHEET 6 FOR LIST OF OTHER APPROVED SENSING ELEMENTS

ATEX APPROVED
INTEGRAL, 2-WIRE, INTELLIPOINT
MODEL NUMBERING SYSTEM
SHT 3 OF 9
420-0004-175-CD ISS. 10

7.2 ATEX Control Drawings (Continued)

									COLUMNS 9 AND UP, DO NOT AFFECT SAFETY					
1	2	3	4	-	5	6	7	8	-	9	10	11	12	
R	a	T	2	-	b	0	c	d	-	*	*	*	*	
	a													a = MEASUREMENT OPTIONS:
														N = 2 pF AUTO-CAL
														M = MANUAL-CAL (STANDARD SENSITIVITY)
														H = 0.5 pF AUTO-CAL (HIGH SENSITIVITY)
														G = MANUAL-CAL (HIGH SENSITIVITY)
														L = 2 pF FIXED
														T = 10 pF AUTO-CAL
														V = 10 pF FIXED
														P = 0.5 pF FIXED (HIGH SENSITIVITY)
			2											2 = ATEX APPROVAL, M20 HOUSING
					b									b = 1-9, A-K CABLE OPTIONS, REMOTE
							c	d						c, d = SENSING ELEMENTS: 00, 02-04, 06, 07, 09-22, 24-28,
														31-40, 50-53, 55, 60-62, 64, 66, 72, 73, 80-83, 85, 90-94, or ZZ.
							0	0						700-1202-001
								2						700-1202-014
								3						700-1202-018
								4						700-1202-041
								6						700-1202-031
								7						700-1202-010
								9						700-1202-033
							1	0						700-0001-018
								1						700-0201-005
								2						700-0201-005 (HAST C)
								3						700-0201-019
								4						700-0202-002
								5						700-0202-043
								6						700-0002-360
								7						700-0202-029
								8						700-0001-022
								9						700-0002-023
							2	0						700-0209-002
								1						700-0202-043 (HAST-C)
								2						700-0202-044
								4						700-0005-285
								5						700-0005-285 (HAST-C)
								6						700-0220-001
								7						700-0221-002
								8						700-1202-051

SENSING ELEMENT LIST
CONTINUED ON NEXT PAGE

ATEX APPROVED
REMOTE, 2-WIRE, INTELLIPOINT
MODEL NUMBERING SYSTEM

SHT 4 OF 9
420-0004-175-CD ISS. 10

7.2 ATEX Control Drawings (Continued)

									COLUMNS 9 AND UP, DO NOT AFFECT SAFETY					
1	2	3	4	-	5	6	7	8	-	9	10	11	12	
R	a	T	2	-	b	0	c	d	-	*	*	*	*	
														SENSING ELEMENTS: CONTINUED…
							3	1						700-0029-001
								2						700-0029-002
								3						700-0029-003
								4						700-0029-004
								5						700-0029-005
								6						700-0029-102
								7						700-0029-103
								8						700-0029-104
								9						700-0029-105
							4	0						700-0029-106
							5	0						700-0207-001
								1						700-0207-002
								2						700-0207-003
								3						700-0207-004
								5						700-0207-006
							6	0						700-0204-038
								1						700-0204-002
								2						700-0204-048
								4						700-0204-024
								6						700-0204-022
							7	2						700-0201-027
								3						700-0201-028
							8	0						700-4200-020
								1						700-4200-030
								2						700-4200-040
								3						700-4200-060
								5						700-9000-494
							9	0						700-0201-059
								1						700-1202-015
								2						700-1202-045
								3						700-1202-055
								4						700-0209-024
							Z	Z						OTHER SENSING ELEMENTS

ATEX APPROVED
REMOTE, 2-WIRE, INTELLIPOINT
MODEL NUMBERING SYSTEM

SHT 5 OF 9
420-0004-175-CD ISS. 10

7.2 ATEX Control Drawings

MODEL NUMBERS OF APPROVED INTRINSICALLY SAFE SENSING ELEMENTS

700-mnop-qrs-t LEVEL PROBE

m = FAMILY NUMBER: 0 THROUGH 9, BLANK
n = FAMILY NUMBER: 0 THROUGH 9, BLANK
o = 0 THROUGH 9, BLANK
p = 0 THROUGH 9
q = FAMILY NUMBER: 0 THROUGH 9, BLANK
r = FAMILY NUMBER: 0 THROUGH 9, BLANK
s = FAMILY NUMBER: 0 THROUGH 9
t = 24 CHARACTER EXPANDED NUMBERING SYSTEM, DOES NOT AFFECT SAFETY

NOTES:
1. MAXIMUM PROCESS TEMPERTURE 290°C.
2. MAXIMUM SENSOR CAPACITANCE < 1µF.
3. MAXIMUM INSERTION LENGTH ***RIGID SENSOR*** 30 FEET (9.14 METERS).
4. MAXIMUM INSERTION LENGTH ***FLEXIBLE SENSOR*** 2000 FEET (609.6 METERS).
5. SENSING ELEMENT ENCLOSURE IP66 (IP RATING DOES NOT APPLY TO SPECIAL SENSORS SUPPLIED WITHOUT A 285- SERIES SENSING ELEMENT ENCLOSURE).

!! SEE PAGE 9 FOR SPECIFIC CONDITIONS OF USE

ATEX APPROVED
ADDITIONAL INTRINSICALLY
SAFE SENSING ELEMENTS

SHT 6 OF 9
420-0004-175-CD ISS. 10

7.2 ATEX Control Drawings (Continued)

											COLUMNS 11 AND UP, DO NOT AFFECT SAFETY					
1	2	3	4	5	6	-	7	8	9	10	-	11	12	13	14	
S	a	R	b	T	2	-	0	0	c	d	-	*	*	*	*	
	a															a = 2 SIL LEVEL 2
			b													b = MEASUREMENT OPTIONS:
																N = 2 pF AUTO-CAL
																H = 0.5 pF AUTO-CAL (HIGH SENSITIVITY)
																L = 2 pF FIXED
																T = 10 pF AUTO-CAL
																V = 10 pF FIXED
																P = 0.5 pF FIXED (HIGH SENSITIVITY)
					2											2 = ATEX APPROVAL, M20 HOUSING
									c	d						c, d = SENSING ELEMENTS: 00, 02, 04, 06, 07, 09, 11-19,
																21, 24, 25, 28, 72, 73, 86, 87, 90-93.
																SENSING ELEMENTS:
									0	0						700-1202-021
										2						700-1202-024
										4						700-1202-042
										6						700-1202-032
										7						700-1202-020
										9						700-1202-034
									1	1						700-0201-005
										2						700-0201-005 (HAST C)
										3						700-0201-019
										4						700-0202-002
										5						700-0202-043
										6						700-0002-360
										7						700-0202-029
										8						700-0001-022
										9						700-0002-023
									2	1						700-0202-043 (HAST-C)
										4						700-0005-485
										5						700-0005-485 (HAST-C)
										8						700-1202-052
									7	2						700-0201-027
										3						700-0201-028
									8	6						700-0005-594
										7						700-0005-595
									9	0						700-0201-059
										1						700-1202-016
										2						700-1202-046
										3						700-1202-056

SIL, ATEX APPROVED
INTEGRAL, 2-WIRE, INTELLIPOINT
MODEL NUMBERING SYSTEM

Reference SIL Manual (SXRXT) For Ordering Detail

SHT 7 OF 9
420-0004-175-CD ISS. 10

7.2 ATEX Control Drawings (Continued)

											COLUMNS 11 AND UP, DO NOT AFFECT SAFETY					
1	2	3	4	5	6	-	7	8	9	10	-	11	12	13	14	
S	a	R	b	T	2	-	c	0	d	e	-	*	*	*	*	
	a															a = 2 SIL LEVEL 2
			b													b = MEASUREMENT OPTIONS:
																N = 2 pF AUTO-CAL
																H = 0.5 pF AUTO-CAL (HIGH SENSITIVITY)
																L = 2 pF FIXED
																T = 10 pF AUTO-CAL
																V = 10 pF FIXED
																P = 0.5 pF FIXED (HIGH SENSITIVITY)
					2											2 = ATEX APPROVAL, M20 HOUSING
							c									c = 1-9, A-K CABLE OPTIONS, REMOTE
									d	e						d, e = SENSING ELEMENTS: 00, 02, 04, 06, 07, 09, 11-21, 24-28,
																60-62, 64, 66, 72, 73, 85, 90-94.
									0	0						700-1202-001
										2						700-1202-014
										4						700-1202-041
										6						700-1202-031
										7						700-1202-010
										9						700-1202-033
									1	1						700-0201-005
										2						700-0201-005 (HAST C)
										3						700-0201-019
										4						700-0202-002
										5						700-0202-043
										6						700-0002-360
										7						700-0202-029
										8						700-0001-022
										9						700-0002-023
									2	0						700-0209-002
										1						700-0202-043 (HAST-C)
										4						700-0005-285
										5						700-0005-285 (HAST-C)
										6						700-0220-001
										7						700-0221-002
										8						700-1202-051
									6	0						700-0204-038
										1						700-0204-002
										2						700-0204-048
										4						700-0204-024
										6						700-0204-022
									7	2						700-0201-027
										3						700-0201-028
									8	5						700-9000-494
									9	0						700-0201-059
										1						700-1202-015
										2						700-1202-045
										3						700-1202-055
										4						700-0209-024

Reference SIL Manual (SXRXT) For Ordering Detail

SIL, ATEX APPROVED
REMOTE, 2-WIRE, INTELLIPOINT
MODEL NUMBERING SYSTEM

SHT 8 OF 9
420-0004-175-CD ISS. 10

7.2 ATEX Control Drawings (Continued)

SPECIFIC CONDITIONS OF USE

1. The enclosure contains aluminum and is considered a potential risk of ignition by impact or friction. Care must be taken into account during installation and use to prevent impact or friction.

2. The equipment shall not be applied in an explosive dust atmosphere where high electrostatic charging processes are present that could result in propagating brush discharges. See CLC/TR 60079-32-1 for additional guidance.

SPECIFIC CONDITIONS OF USE
SHT 9 OF 9
420-0004-175-CD ISS. 9

7.3 CE Mark Declaration of Conformity

DREXELBROOK

205 Keith Valley Road, Horsham, PA 19044
Telephone: 215-674-1234 Fax: 215-674-2731
www.ametek.com www.drexelbrook.com

AMETEK

420-0004-250		Sht. 1 of 1	APP'D BY SGA
ISSUE	EDO NO.	APP'D	DATE
8	9-18-102	SGA	9-13-18
9	10-18-106	SGA	11-2-18

Declaration of Conformity

AMETEK DREXELBROOK
205 KEITH VALLEY ROAD
HORSHAM, PENNSYLVANIA
USA, 19044

We declare under our sole responsibility that the product **2 – Wire IntelliPoint Point** Level Measurement Systems Model Number RXTX2 / SXRXT2 Series which this declaration relates is in conformity with the following standards and entitled to carry the CE Mark:

Product Type: Measurement, Control Equipment and Laboratory

Following the provisions of 2014/30/EU Directive,
Conforms to the requirements of:

EN 61326-1-:2013	Clause 7.2 Emissions Class A and Class B
EN 61326-1-:2013	Table 2 Immunity Group 1, Class B Industrial Area

Following the provisions of 2014/34/EU ATEX Directive, Harmonized Standards

Conforms to the requirements of:
EN 60079-0:2012+A11:2013, EN 60079-1:2014, EN 60079-11:2012, EN 60079-26:2015, EN 60079-31:2013, EN 60529+A1:2000+A2:2013

QAN Notified Body Number 2460

EC-Type Examination Certificate Number FM14ATEX0049
FM Approvals Ltd. 1 Windsor Dials, Windsor, Berkshire, UK SL4 1RS

Steven G. Arnold

Steven G. Arnold
Quality Assurance & Product Safety Manager

Issue Date: ____

7.4 IECEx Control Drawings

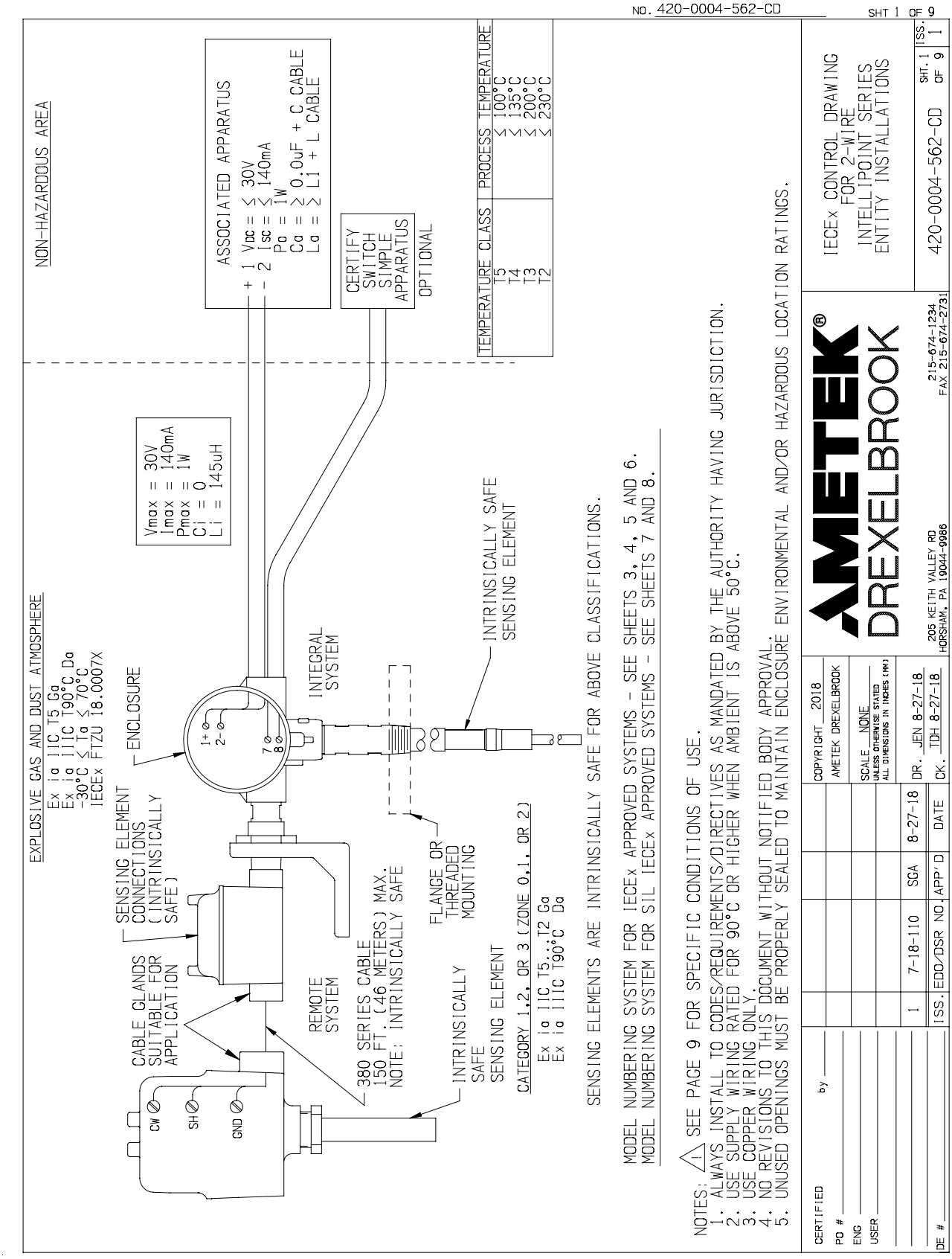

7.4 IECEx Control Drawings (Continued)

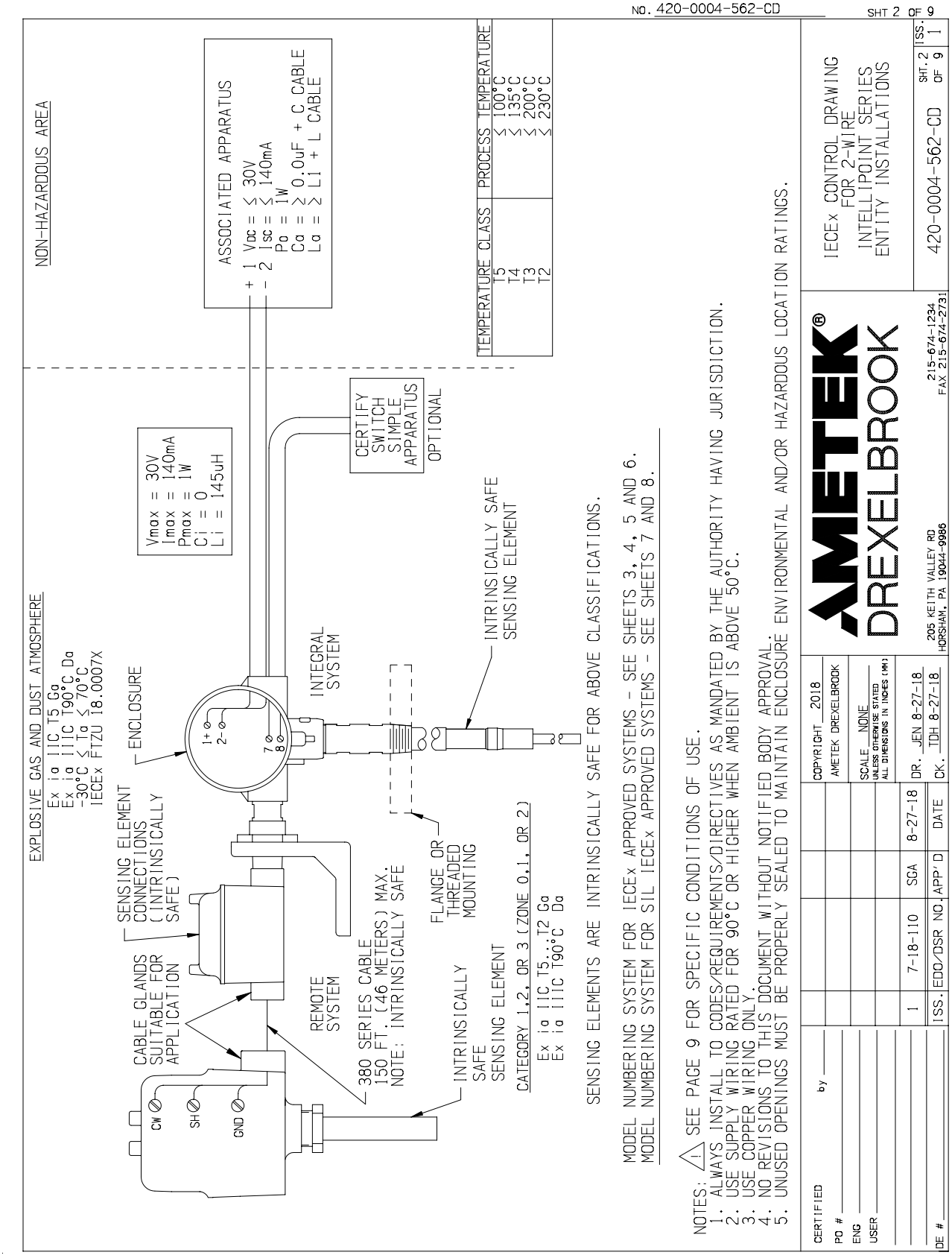

7.4 IECEx Control Drawings (Continued)

									COLUMNS 9 AND UP, DO NOT AFFECT SAFETY					
1	2	3	4	-	5	6	7	8	-	9	10	11	12	
R	a	T	b	-	0	0	c	d	-	*	*	*	*	
	a													a = MEASUREMENT OPTIONS:
														N = 2 pF AUTO-CAL
														M = MANUAL-CAL (STANDARD SENSITIVITY)
														H = 0.5 pF AUTO-CAL (HIGH SENSITIVITY)
														G = MANUAL-CAL (HIGH SENSITIVITY)
														L = 2 pF FIXED
														T = 10 pF AUTO-CAL
														V = 10 pF FIXED
														P = 0.5 pF FIXED (HIGH SENSITIVITY)
			b											b = 2 IECEx APPROVAL, M20 HOUSING
							c							c = 0, 1, 2, 7, 8, 9, Z SENSING ELEMENTS
								d						d = 0-9, Z SENSING ELEMENTS
							0	0						700-1202-021
								2						700-1202-024
								3						700-1202-028
								4						700-1202-042
								6						700-1202-032
								7						700-1202-020
								9						700-1202-034
							1	1						700-0201-005
								2						700-0201-005 (HAST C)
								3						700-0201-019
								4						700-0202-002
								5						700-0202-043
								6						700-0002-360
								7						700-0202-029
								8						700-0001-022
								9						700-0002-023
							2	1						700-0202-043 (HAST-C)
								2						700-1202-044
								4						700-0005-485
								5						700-0005-485 (HAST-C)
								8						700-1202-052
							7	2						700-0201-027
								3						700-0201-028
							8	6						700-0005-594
								7						700-0005-595
							9	0						700-0201-059
								1						700-1202-016
								2						700-1202-046
								3						700-1202-056
							Z	Z						SEE SHEET 6 FOR LIST OF OTHER APPROVED SENSING ELEMENTS

IECEx APPROVED
INTEGRAL, 2-WIRE, INTELLIPOINT
MODEL NUMBERING SYSTEM
SHT 3 OF 9
420-0004-562-CD ISS. 1

7.4 IECEx Control Drawings (Continued)

									COLUMNS 9 AND UP, DO NOT AFFECT SAFETY					
1	2	3	4	-	5	6	7	8	-	9	10	11	12	
R	a	T	b	-	c	0	d	e	-	*	*	*	*	
	a													a = MEASUREMENT OPTIONS:
														N = 2 pF AUTO-CAL
														M = MANUAL-CAL (STANDARD SENSITIVITY)
														H = 0.5 pF AUTO-CAL (HIGH SENSITIVITY)
														G = MANUAL-CAL (HIGH SENSITIVITY)
														L = 2 pF FIXED
														T = 10 pF AUTO-CAL
														V = 10 pF FIXED
														P = 0.5 pF FIXED (HIGH SENSITIVITY)
			b											b = 2 IECEx APPROVAL, M20 HOUSING
					c									c = 1-9, A-K CABLE OPTIONS, REMOTE
							d							d = 0-9, Z SENSING ELEMENTS
								e						e = 0-9, Z SENSING ELEMENTS
							0	0						700-1202-001
								2						700-1202-014
								3						700-1202-018
								4						700-1202-041
								6						700-1202-031
								7						700-1202-010
								9						700-1202-033
							1	0						700-0001-018
								1						700-0201-005
								2						700-0201-005 (HAST C)
								3						700-0201-019
								4						700-0202-002
								5						700-0202-043
								6						700-0002-360
								7						700-0202-029
								8						700-0001-022
								9						700-0002-023
							2	0						700-0209-002
								1						700-0202-043 (HAST-C)
								2						700-0202-044
								4						700-0005-285
								5						700-0005-285 (HAST-C)
								6						700-0220-001
								7						700-0221-002
								8						700-1202-051

SENSING ELEMENT LIST
CONTINUED ON NEXT PAGE

IECEx APPROVED
REMOTE, 2-WIRE, INTELLIPOINT
MODEL NUMBERING SYSTEM

SHT 4 OF 9
420-0004-562-CD ISS. 1

7.4 IECEx Control Drawings (Continued)

									COLUMNS 9 AND UP, DO NOT AFFECT SAFETY					
1	2	3	4	-	5	6	7	8	-	9	10	11	12	
R	a	T	b	-	c	0	d	e	-	*	*	*	*	
														SENSING ELEMENTS: CONTINUED…
							3	1						700-0029-001
								2						700-0029-002
								3						700-0029-003
								4						700-0029-004
								5						700-0029-005
								6						700-0029-102
								7						700-0029-103
								8						700-0029-104
								9						700-0029-105
							4	0						700-0029-106
							5	0						700-0207-001
								1						700-0207-002
								2						700-0207-003
								3						700-0207-004
								5						700-0207-006
							6	0						700-0204-038
								1						700-0204-002
								2						700-0204-048
								4						700-0204-024
								6						700-0204-022
							7	2						700-0201-027
								3						700-0201-028
							8	0						700-4200-020
								1						700-4200-030
								2						700-4200-040
								3						700-4200-060
								5						700-9000-494
							9	0						700-0201-059
								1						700-1202-015
								2						700-1202-045
								3						700-1202-055
								4						700-0209-024
							N	N						RXXX-1XNN-NN-CD
							Z	Z						OTHER SENSING ELEMENTS

IECEx APPROVED
REMOTE, 2-WIRE, INTELLIPOINT
MODEL NUMBERING SYSTEM

SHT 5 OF 9
420-0004-562-CD ISS. 1

7.4 IECEx Control Drawings (Continued)

MODEL NUMBERS OF APPROVED INTRINSICALLY SAFE SENSING ELEMENTS

700-mnop-qrs-t LEVEL PROBE

m = FAMILY NUMBER: 0 THROUGH 9, BLANK
n = FAMILY NUMBER: 0 THROUGH 9, BLANK
o = 0 THROUGH 9, BLANK
p = 0 THROUGH 9
q = FAMILY NUMBER: 0 THROUGH 9, BLANK
r = FAMILY NUMBER: 0 THROUGH 9, BLANK
s = FAMILY NUMBER: 0 THROUGH 9
t = 24 CHARACTER EXPANDED NUMBERING SYSTEM, DOES NOT AFFECT SAFETY

NOTES:
1. MAXIMUM PROCESS TEMPERTURE 290°C.
2. MAXIMUM SENSOR CAPACITANCE < 1µF.
3. MAXIMUM INSERTION LENGTH ***RIGID SENSOR*** 30 FEET (9.14 METERS).
4. MAXIMUM INSERTION LENGTH ***FLEXIBLE SENSOR*** 2000 FEET (609.6 METERS).
5. SENSING ELEMENT ENCLOSURE IP66 (IP RATING DOES NOT APPLY TO SPECIAL SENSORS SUPPLIED WITHOUT A 285- SERIES SENSING ELEMENT ENCLOSURE).

IECEx APPROVED
ADDITIONAL INTRINSICALLY
SAFE SENSING ELEMENTS

SHT 6 OF 9
420-0004-562-CD ISS. 1

7.4 IECEx Control Drawings (Continued)

											COLUMNS 11 AND UP, DO NOT AFFECT SAFETY					
1	2	3	4	5	6	-	7	8	9	10	-	11	12	13	14	
S	a	R	b	T	c	-	0	0	d	e	-	*	*	*	*	
	a															a = 2 SIL LEVEL 2
			b													b = MEASUREMENT OPTIONS:
																N = 2 pF AUTO-CAL
																H = 0.5 pF AUTO-CAL (HIGH SENSITIVITY)
																L = 2 pF FIXED
																T = 10 pF AUTO-CAL
																V = 10 pF FIXED
																P = 0.5 pF FIXED (HIGH SENSITIVITY)
					c											c = 2 IECEx APPROVAL, M20 HOUSING
									d							d = 0, 1, 2, 7, 8, 9 SENSING ELEMENTS
										e						e = 0-9
																SENSING ELEMENTS:
									0	0						700-1202-021
										2						700-1202-024
										4						700-1202-042
										6						700-1202-032
										7						700-1202-020
										9						700-1202-034
									1	1						700-0201-005
										2						700-0201-005 (HAST C)
										3						700-0201-019
										4						700-0202-002
										5						700-0202-043
										6						700-0002-360
										7						700-0202-029
										8						700-0001-022
										9						700-0002-023
									2	1						700-0202-043 (HAST-C)
										4						700-0005-485
										5						700-0005-485 (HAST-C)
										8						700-1202-052
									7	2						700-0201-027
										3						700-0201-028
									8	6						700-0005-594
										7						700-0005-595
									9	0						700-0201-059
										1						700-1202-016
										2						700-1202-046
										3						700-1202-056

Reference SIL Manual (SXRXT) For Ordering Detail

SIL, IECEx APPROVED
INTEGRAL, 2-WIRE, INTELLIPOINT
MODEL NUMBERING SYSTEM

SHT 7 OF 9
420-0004-562-CD ISS. 1

7.4 IECEx Control Drawings (Continued)

											COLUMNS 11 AND UP, DO NOT AFFECT SAFETY					
1	2	3	4	5	6	-	7	8	9	10	-	11	12	13	14	
S	a	R	b	T	c	-	d	0	e	f	-	*	*	*	*	
	a															a = 2 SIL LEVEL 2
			b													b = MEASUREMENT OPTIONS:
																N = 2 pF AUTO-CAL
																H = 0.5 pF AUTO-CAL (HIGH SENSITIVITY)
																L = 2 pF FIXED
																T = 10 pF AUTO-CAL
																V = 10 pF FIXED
																P = 0.5 pF FIXED (HIGH SENSITIVITY)
					c											c = 2 IECEx APPROVAL, M20 HOUSING
							d									d = 1-9, A-K CABLE OPTIONS, REMOTE
									e							e = 0, 1, 2, 6, 7, 8, 9 SENSING ELEMENTS
										f						f = 0-9 SENSING ELEMENTS
									0	0						700-1202-001
										2						700-1202-014
										4						700-1202-041
										6						700-1202-031
										7						700-1202-010
										9						700-1202-033
									1	1						700-0201-005
										2						700-0201-005 (HAST C)
										3						700-0201-019
										4						700-0202-002
										5						700-0202-043
										6						700-0002-360
										7						700-0202-029
										8						700-0001-022
										9						700-0002-023
									2	0						700-0209-002
										1						700-0202-043 (HAST-C)
										4						700-0005-285
										5						700-0005-285 (HAST-C)
										6						700-0220-001
										7						700-0221-002
										8						700-1202-051
									6	0						700-0204-038
										1						700-0204-002
										2						700-0204-048
										4						700-0204-024
										6						700-0204-022
									7	2						700-0201-027
										3						700-0201-028
									8	5						700-9000-494
									9	0						700-0201-059
										1						700-1202-015
										2						700-1202-045
										3						700-1202-055
										4						700-0209-024

Reference SIL Manual (SXRXT) For Ordering Detail

SIL, IECEx APPROVED
REMOTE, 2-WIRE, INTELLIPOINT
MODEL NUMBERING SYSTEM

SHT 8 OF 9
420-0004-562-CD ISS. 1

7.4 IECEx Control Drawings (Continued)

SPECIFIC CONDITIONS OF USE:

1 THE EQUIPMENT SHALL NOT BE APPLIED IN AN EXPLOSIVE DUST ATMOSPHERE WHERE HIGH ELECTROSTATIC CHARGING PROCESSES ARE PRESENT THAT COULD RESULT IN PROPAGATING BRUSH DISCHARGES.

2 CONSULT THE MANUFACTURER IF DIMENSIONAL INFORMATION ON THE FLAMEPROOF JOINTS IS NECESSARY.

3 AMBIENT TEMPERATURE RANGE:
-30°C TO +58°C FOR RXLX/SXRXTX INTELLIPOINT RF LEVEL SYSTEM
-30°C TO +70°C FOR RXTX/SXRXTX INTELLIPOINT RF TWO-WIRE POINT LEVEL SYSTEM

IECEx APPROVED
2-WIRE, INTELLIPOINT
SPECIFIC CONDITIONS OF USE

SHT 9 OF 9
420-0004-562-CD ISS. 1

7.5 Mounting and Wiring for Spark Protector Drawings

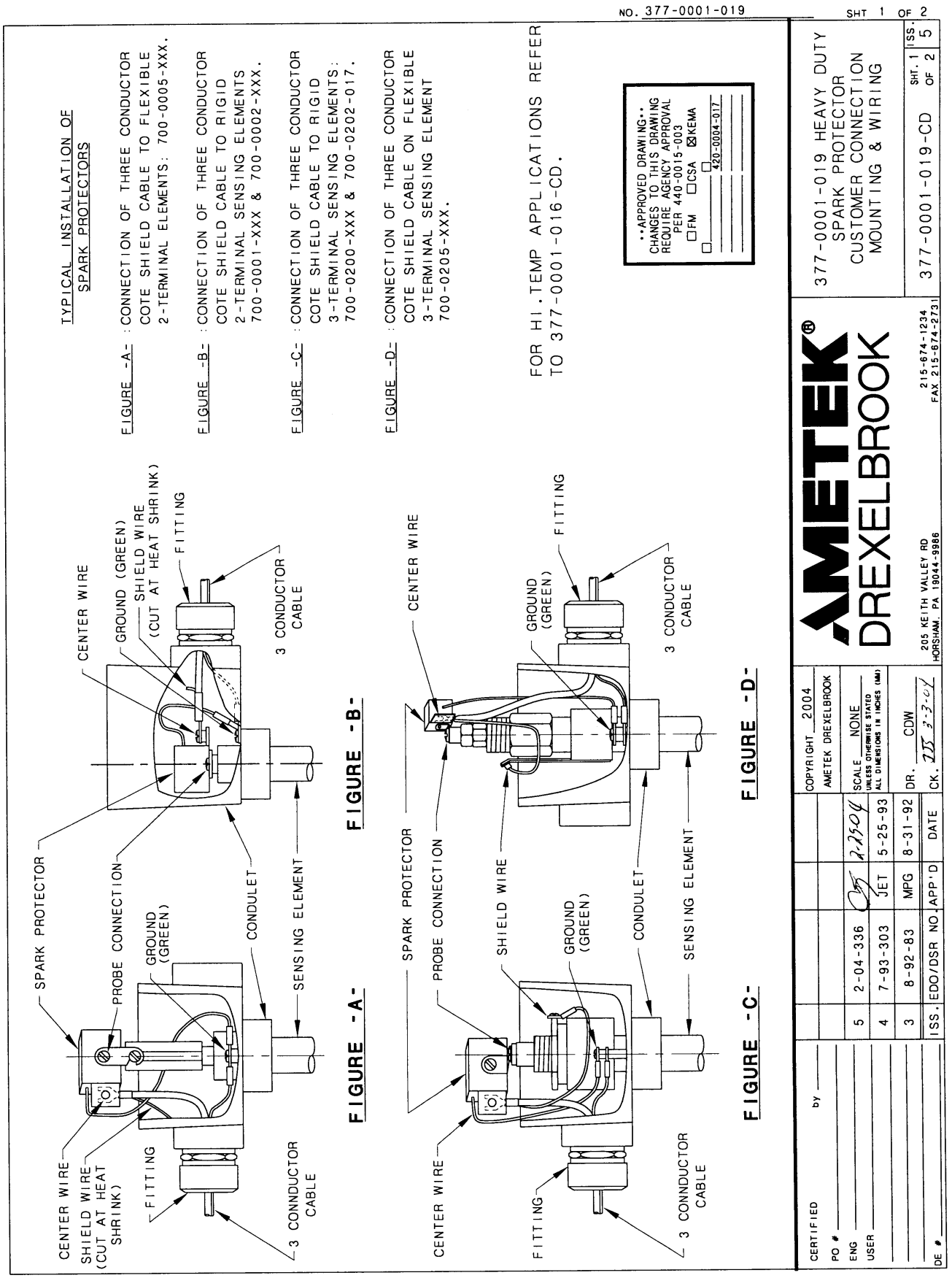

7.5 Mounting and Wiring for Spark Protector (Continued)

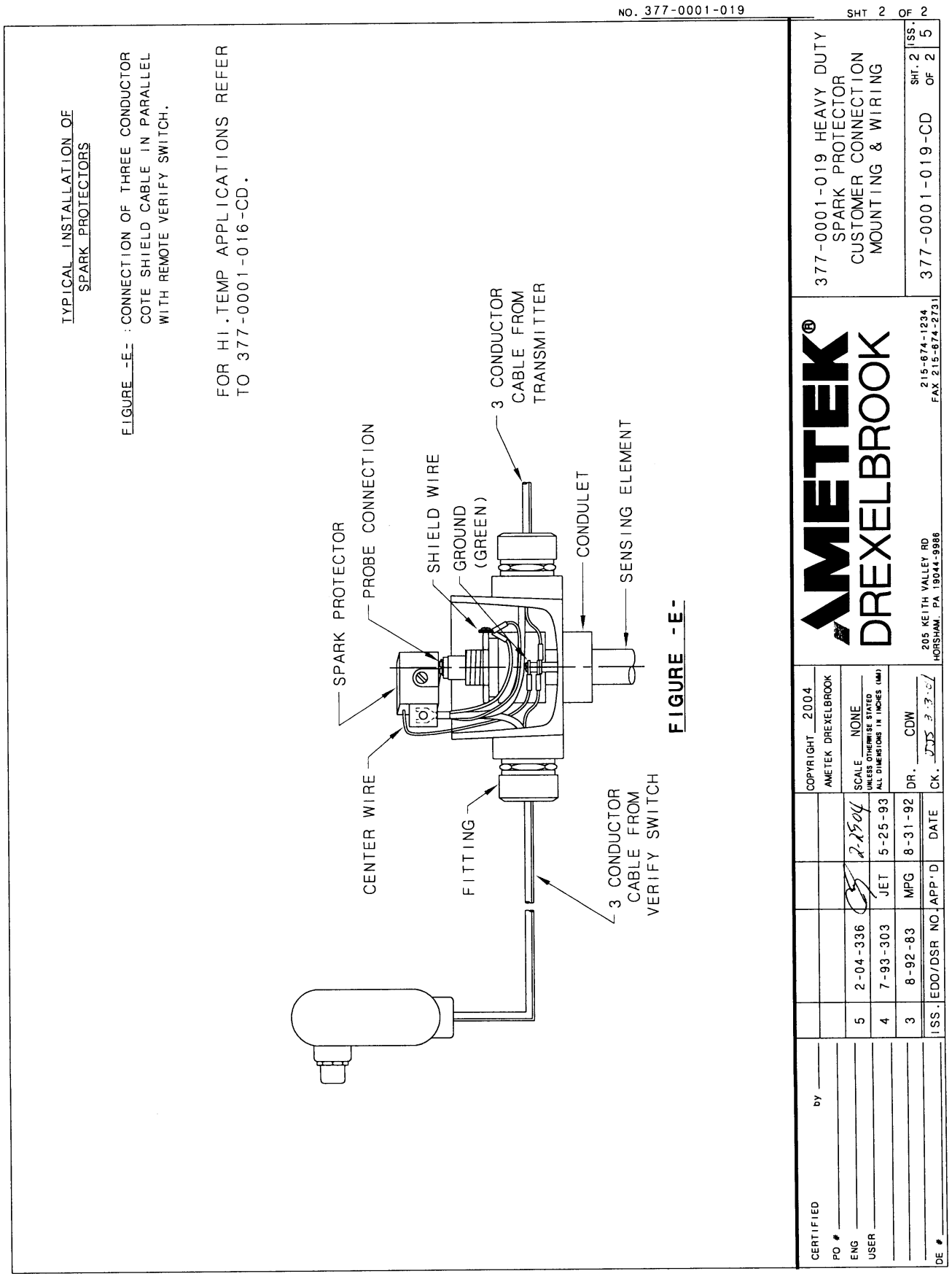

7.5 Mounting and Wiring for Spark Protector (Continued)

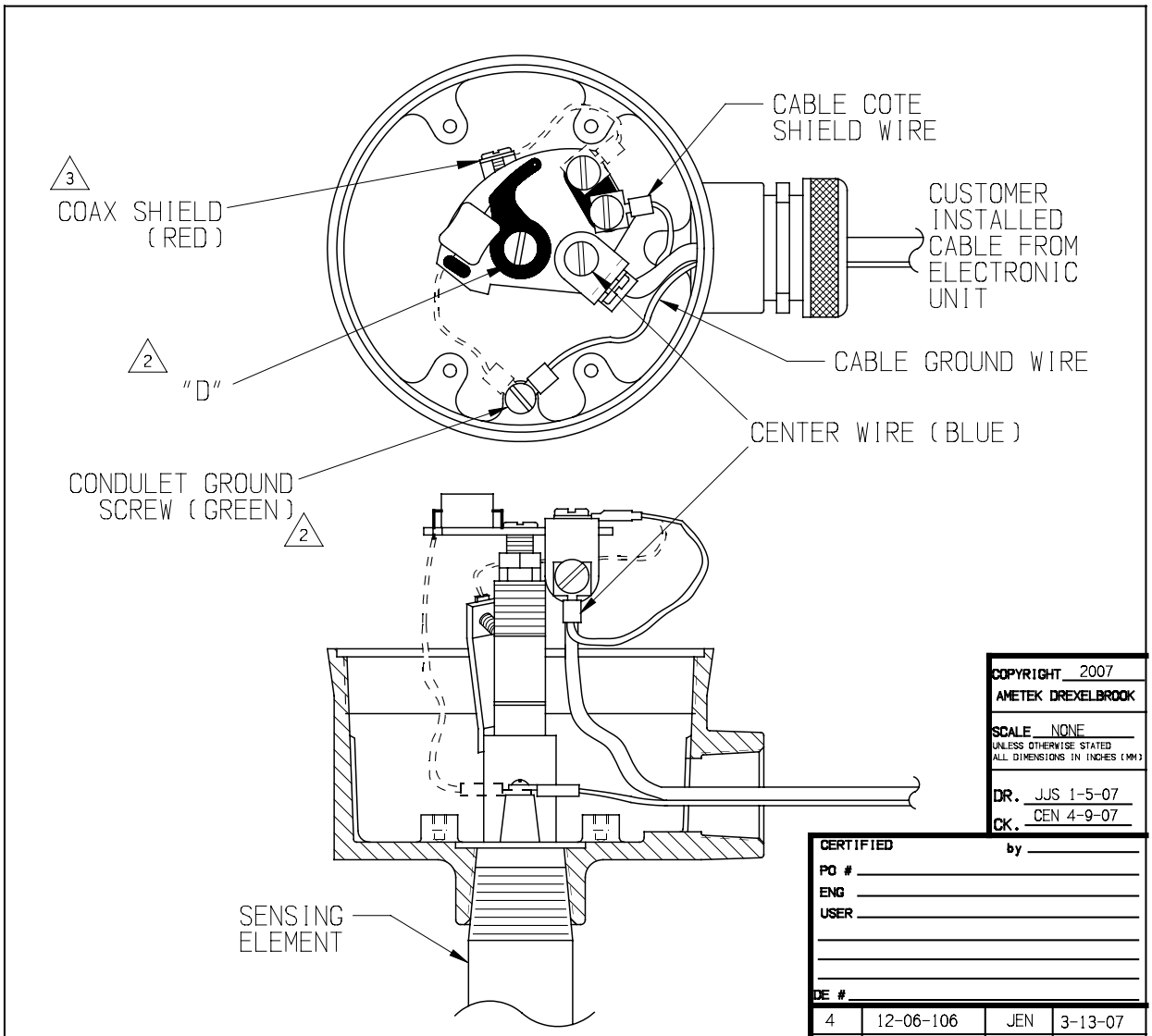

NOTES:
1. SPARK PROTECTOR IS SHOWN ON A 303-0029-10X PROBE. IT CAN BE INSTALLED ON OTHER COTE SHIELD PROBES IN THE SAME MANNER.
2. SPARK PROTECTOR IS MOUNTED IN CONDULET WITH LAND SIDE UP. CENTER ROD OF SENSING ELEMENT CONNECTION IS THROUGH HOLE "D". RING LUG IS ATTACHED TO GROUND SCREW (GREEN) BY D.E.
3. D.E. INSTALLED JUMPER WIRE 353-0002-047 TO JUMPER SHIELD OF PROBE TO SPARK PROTECTOR. RING LUG END GOES TO THE PROBE, SPADE LUG END GOES TO SPARK PROTECTOR PCB.
4. TEMPERATURE RANGE: -55°C TO +125°C.
5. ALL DASHED WIRES ARE FACTORY INSTALLED.

COPYRIGHT 2007
AMETEK DREXELBROOK

SCALE NONE
UNLESS OTHERWISE STATED
ALL DIMENSIONS IN INCHES (MM)

DR. JJS 1-5-07
CK. CEN 4-9-07

CERTIFIED by
PO #
ENG
USER
DE #

ISS.	EDO/DSR NO.	APP'D	DATE
4	12-06-106	JEN	3-13-07
3	1-01-304	JET	5-18-01
2	6-99-246	DL	8-16-99
1	4-99-303	JET	6-10-99
A	1-80-221	——	2-21-80

AMETEK®
DREXELBROOK

205 KEITH VALLEY RD
HORSHAM, PA 19044-9986
215-674-1234
FAX 215-674-2731

MOUNTING AND WIRING FOR SPARK PROTECTOR 377-0001-016

377-0001-016-CD SHT. 1 OF 1 ISS. 4

NO. 377-0001-016-CD SHT 1 OF 1

7.6 Adding a Padded Capacitor

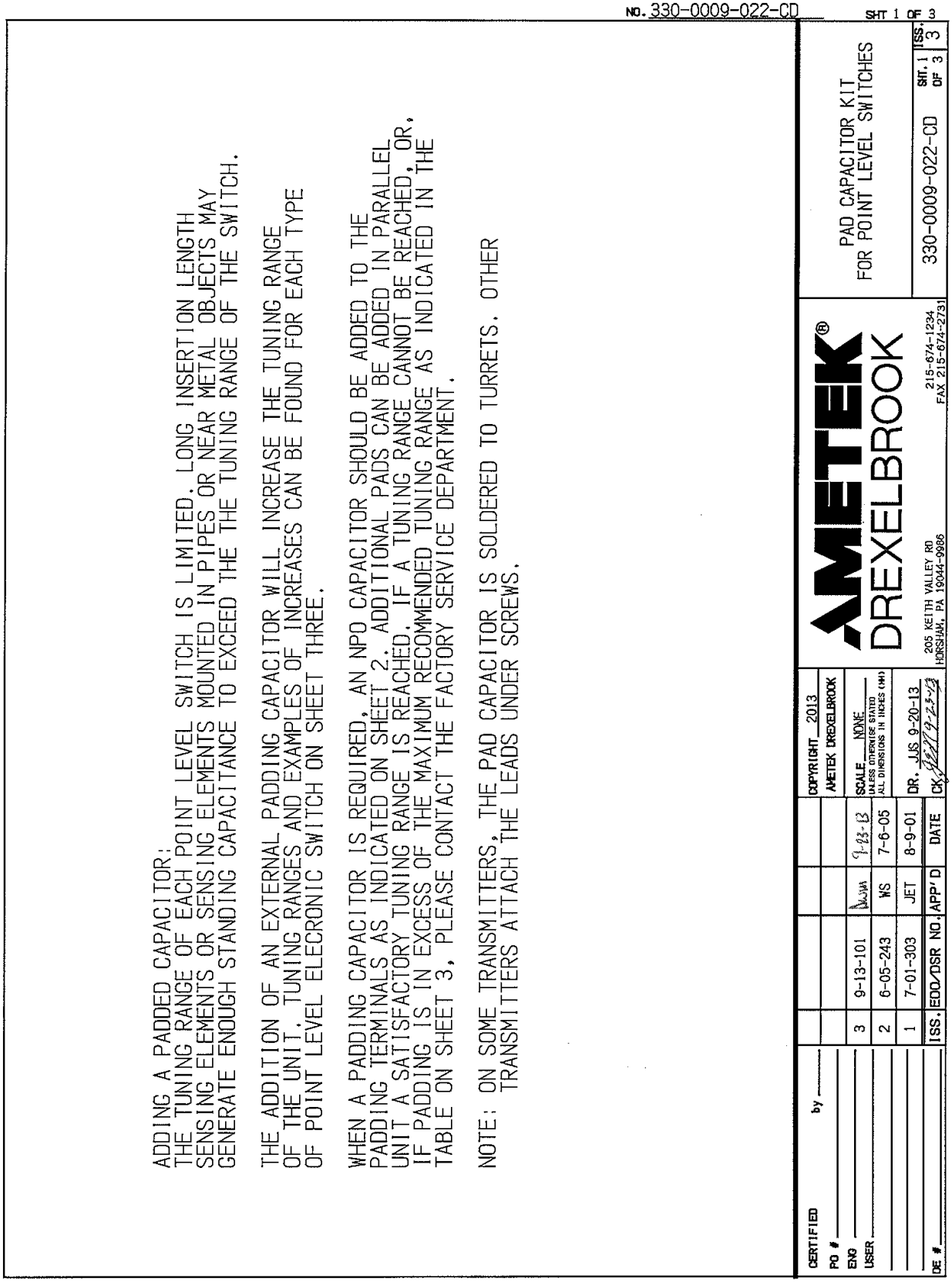

7.6 Adding a Padded Capacitor (Continued)

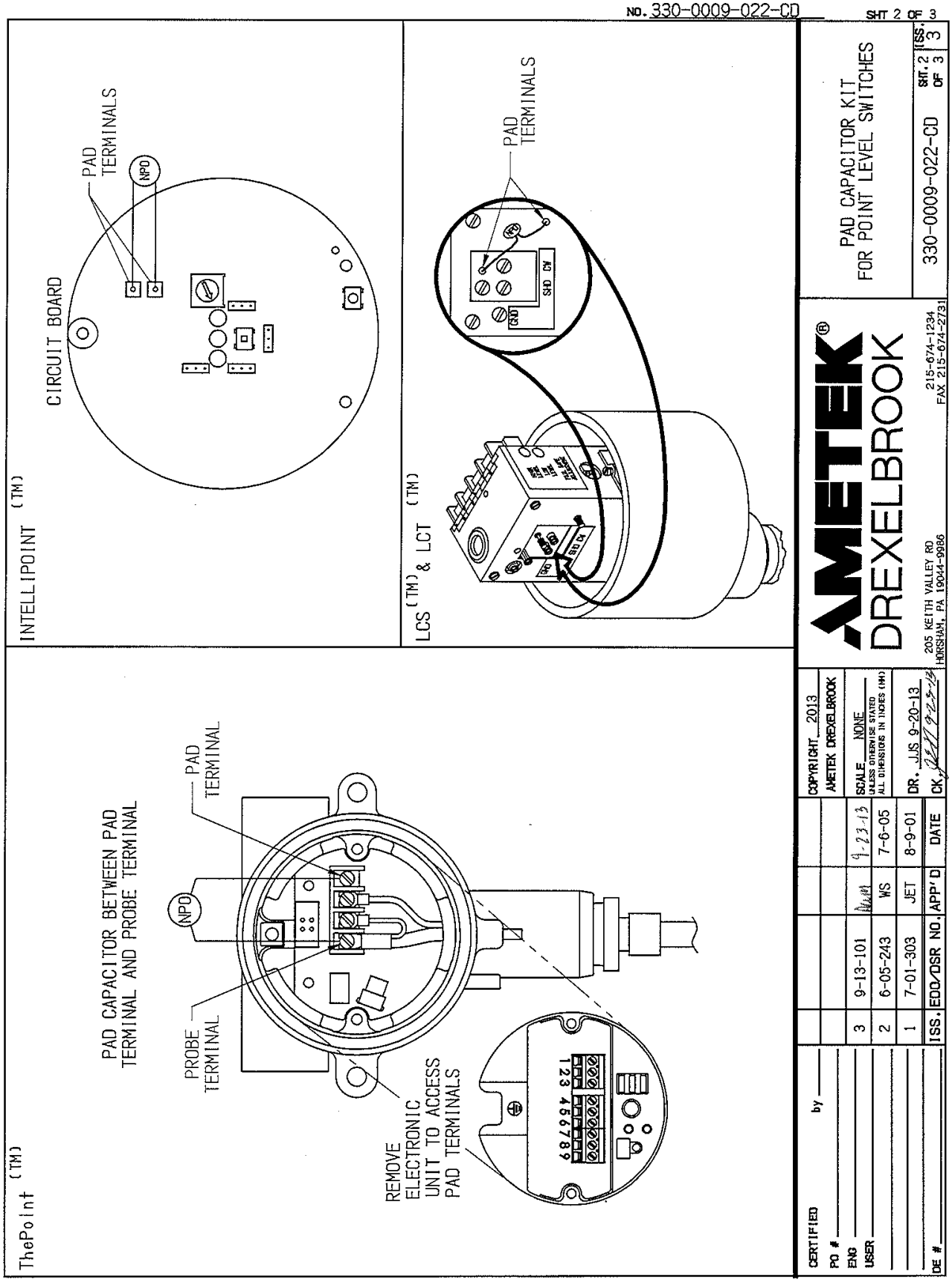

7.6 Adding a Padded Capacitor (Continued)

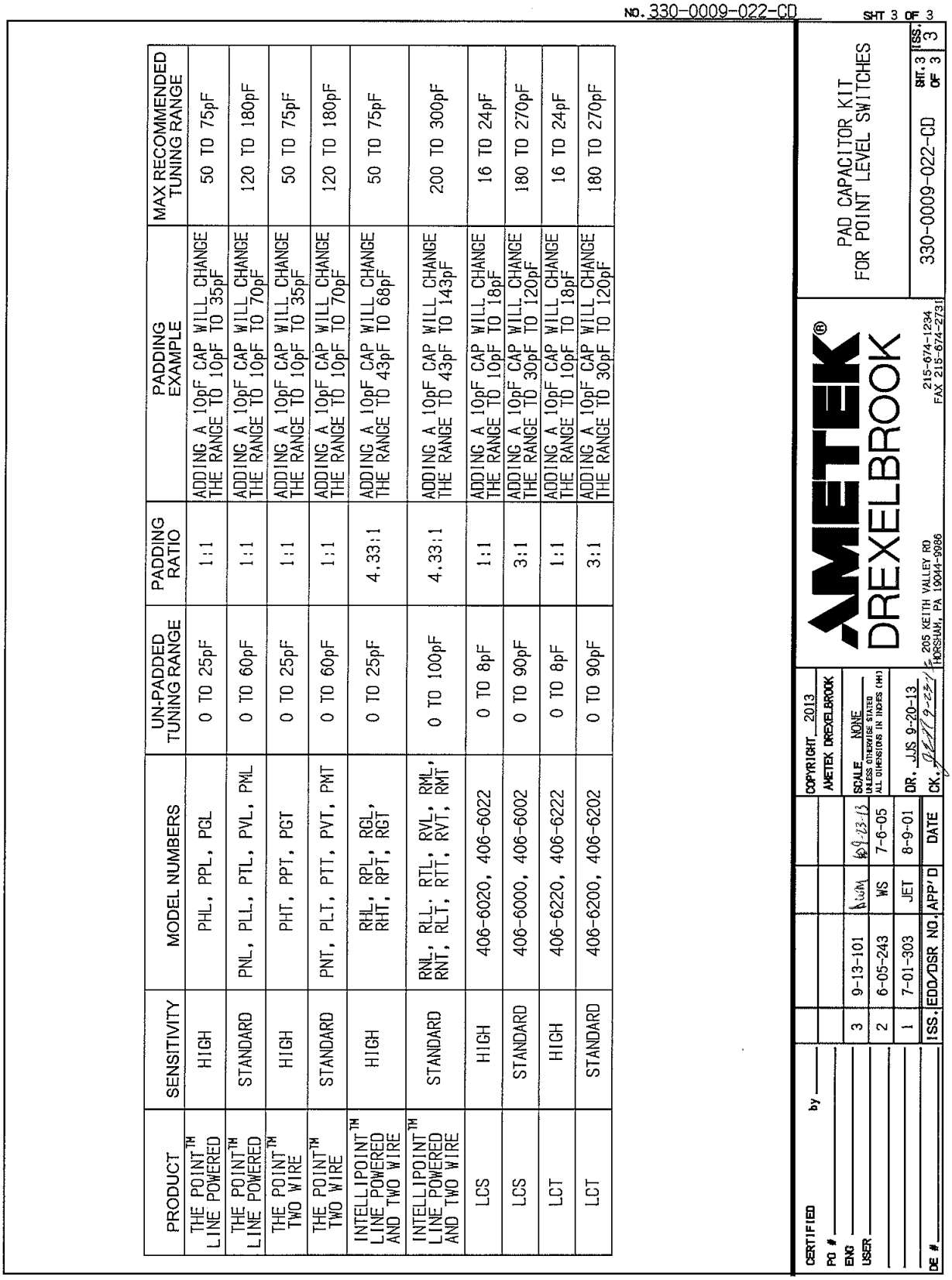

NO. 330-0009-022-CD SHT 3 OF 3

PRODUCT	SENSITIVITY	MODEL NUMBERS	UN-PADDED TUNING RANGE	PADDING RATIO	PADDING EXAMPLE	MAX RECOMMENDED TUNING RANGE
THE POINT™ LINE POWERED	HIGH	PHL, PPL, PGL	0 TO 25pF	1:1	ADDING A 10pF CAP WILL CHANGE THE RANGE TO 10pF TO 35pF	50 TO 75pF
THE POINT™ LINE POWERED	STANDARD	PNL, PLL, PTL, PVL, PML	0 TO 60pF	1:1	ADDING A 10pF CAP WILL CHANGE THE RANGE TO 10pF TO 70pF	120 TO 180pF
THE POINT™ TWO WIRE	HIGH	PHT, PPT, PGT	0 TO 25pF	1:1	ADDING A 10pF CAP WILL CHANGE THE RANGE TO 10pF TO 35pF	50 TO 75pF
THE POINT™ TWO WIRE	STANDARD	PNT, PLT, PTT, PVT, PMT	0 TO 60pF	1:1	ADDING A 10pF CAP WILL CHANGE THE RANGE TO 10pF TO 70pF	120 TO 180pF
INTELLIPOINT™ LINE POWERED AND TWO WIRE	HIGH	RHL, RPL, RGL, RHT, RPT, RGT	0 TO 25pF	4.33:1	ADDING A 10pF CAP WILL CHANGE THE RANGE TO 43pF TO 68pF	50 TO 75pF
INTELLIPOINT™ LINE POWERED AND TWO WIRE	STANDARD	RNL, RLL, RTL, RVL, RML, RNT, RLT, RTT, RVT, RMT	0 TO 100pF	4.33:1	ADDING A 10pF CAP WILL CHANGE THE RANGE TO 43pF TO 143pF	200 TO 300pF
LCS	HIGH	406-6020, 406-6022	0 TO 8pF	1:1	ADDING A 10pF CAP WILL CHANGE THE RANGE TO 10pF TO 18pF	16 TO 24pF
LCS	STANDARD	406-6000, 406-6002	0 TO 90pF	3:1	ADDING A 10pF CAP WILL CHANGE THE RANGE TO 30pF TO 120pF	180 TO 270pF
LCT	HIGH	406-6220, 406-6222	0 TO 8pF	1:1	ADDING A 10pF CAP WILL CHANGE THE RANGE TO 10pF TO 18pF	16 TO 24pF
LCT	STANDARD	406-6200, 406-6202	0 TO 90pF	3:1	ADDING A 10pF CAP WILL CHANGE THE RANGE TO 30pF TO 120pF	180 TO 270pF

CERTIFIED by _____
PO # _____
ENG _____
USER _____
DE # _____

ISS.	EDO/DSR NO.	APP'D	DATE
3	9-13-101	[illegible]	9-13-13
2	6-05-243	WS	7-6-05
1	7-01-303	JET	8-9-01

COPYRIGHT 2013 AMETEK DREXELBROOK
SCALE NONE UNLESS OTHERWISE STATED ALL DIMENSIONS IN INCHES (MM)
DR. JJS 9-20-13
CK. [signature] 9-25-13

AMETEK® DREXELBROOK
205 KEITH VALLEY RD HORSHAM, PA 19044-9986
215-674-1234 FAX 215-674-2731

PAD CAPACITOR KIT FOR POINT LEVEL SWITCHES

330-0009-022-CD SHT. 3 OF 3 ISS. 3

7.7 Dual Seal Assembly for 700 Series Sensing Elements

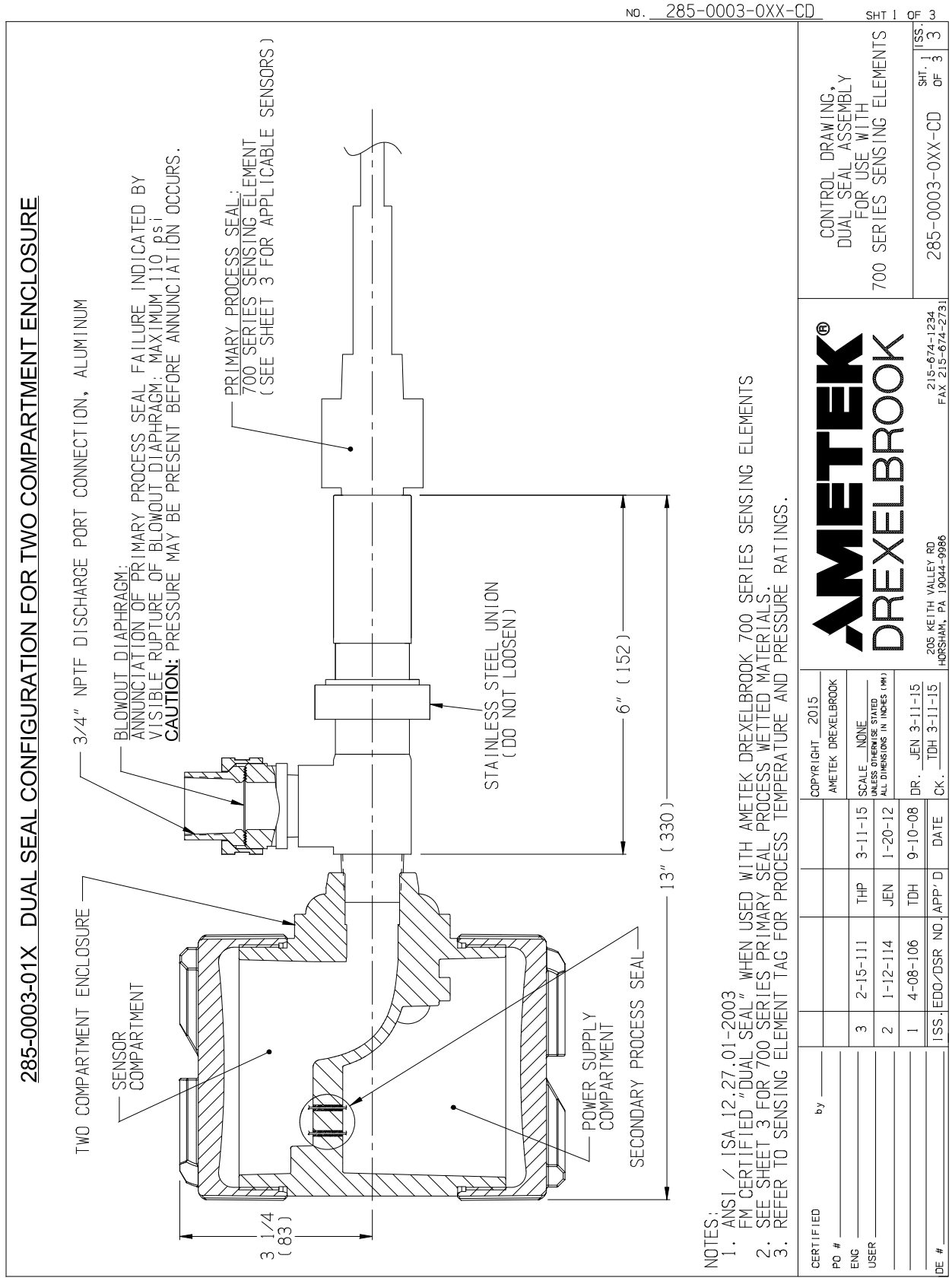

7.7 Dual Seal Assembly (Continued)

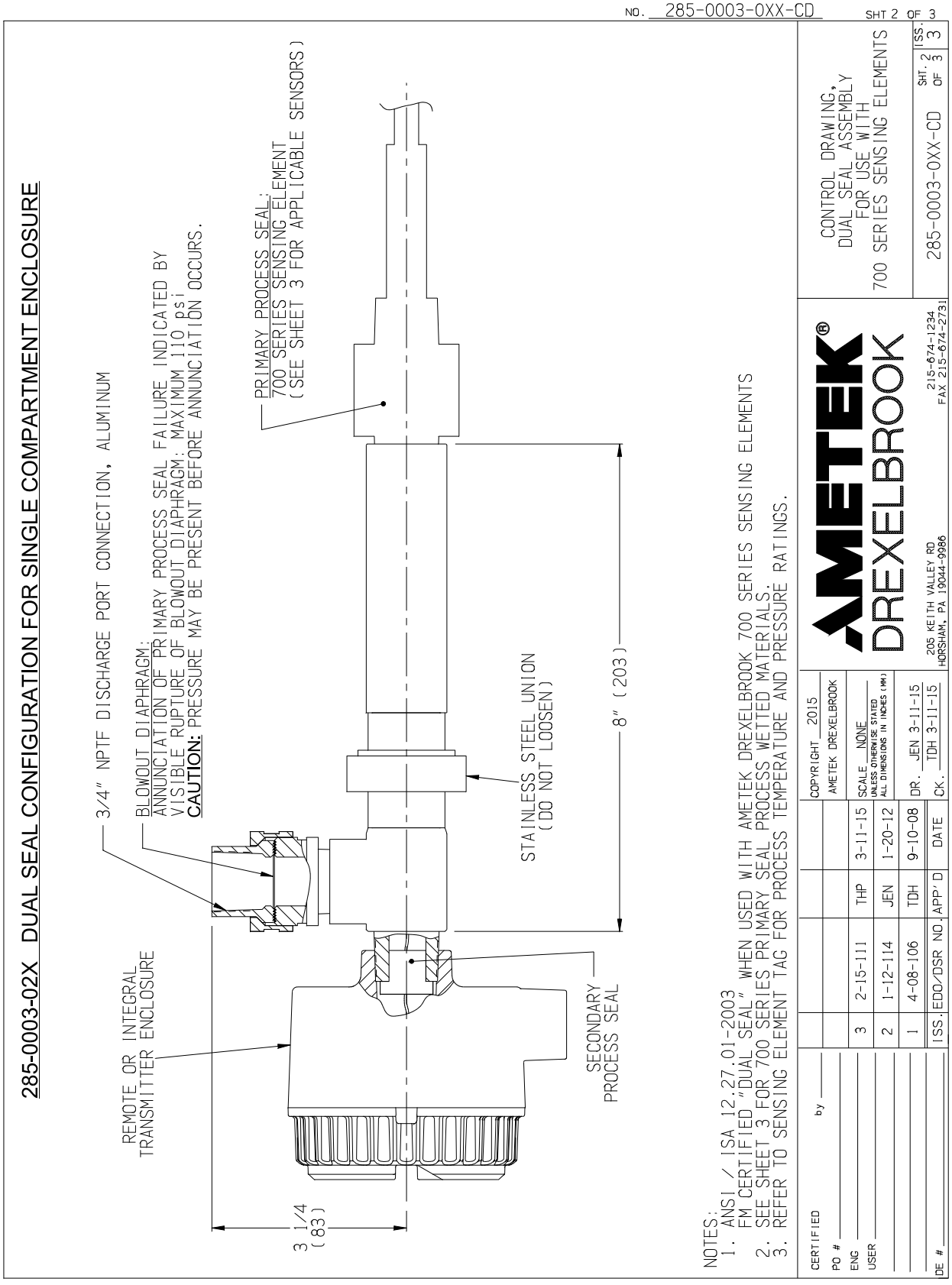

SENSING ELEMENTS AVAILABLE

SENSOR MODEL #	PRIMARY SEAL WETTED MATERIALS
700-0001-022	TFE/316SS
700-0001-024	TFE/316SS
700-0001-026	TFE/316SS
700-0001-034	TFE/CS
700-0001-040	POLYETHYLENE/316SS
700-0001-044	PFA/316SS
700-0001-054	TFE/316SS
700-0001-064	TFE/316SS
700-0001-074	TFE/316SS
700-0001-344	PFA/316SS
700-0002-023	TFE/316SS
700-0002-024	TFE/316SS
700-0002-027	FEP/TFE/316SS
700-0002-028	TFE/316SS
700-0002-033	TFE/316SS
700-0002-037	PVDF/TFE/316SS
700-0002-040	UHMW PE/SILICONE/316SS
700-0002-044	PVDF/TFE/316SS

SENSOR MODEL #	PRIMARY SEAL WETTED MATERIALS
700-0002-054	FEP/TFE/316SS
700-0002-057	PVDF/TFE/316SS
700-0002-064	PVDF/TFE/316SS
700-0002-224	TFE/316SS
700-0002-321	FEP/TFE/316SS
700-0002-360	PFA/TFE/316SS
700-0005-054	PFA/TFE/316SS
700-0201-005	TFE/316SS
700-0201-025	TFE/316SS
700-0201-026	TFE/316SS
700-0201-027	TFE/316SS
700-0201-028	TFE/316SS
700-0201-035	TFE/316SS
700-0201-051	TFE/316SS
700-0201-052	TFE/316SS
700-0201-058	TFE/316SS
700-0201-059	TFE/316SS
700-0202-002	TFE/316SS

SENSOR MODEL #	PRIMARY SEAL WETTED MATERIALS
700-0202-053	TFE/316SS
700-0202-054	TFE/316SS
700-0202-056	TFE/316SS
700-1202-001	PEEK/316SS
700-1202-010	PEEK/316SS
700-1202-014	PEEK/316SS
700-1202-015	PEEK/316SS
700-1202-018	PEEK/316SS
700-1202-031	PEEK/316SS
700-1202-033	PEEK/316SS
700-1202-041	PEEK/316SS
700-1202-045	PEEK/316SS
700-1202-051	PEEK/316SS
700-1202-055	PEEK/316SS
700-1202-061	PEEK/316SS
700-1202-081	PEEK/316SS
700-9100-403	PEEK/316SS
700-9100-404	PEEK/316SS
700-1230-XXX-XX-XXX	PEEK/CS/316SS ⟨3⟩

CERTIFIED by _____
PO # _____
ENG _____
USER _____
DE # _____

ISS.	EDO/DSR NO.	APP'D	DATE
3	2-15-111	THP	3-11-15
2	1-12-114	JEN	1-20-12
1	4-08-106	TDH	9-10-08

COPYRIGHT 2015
AMETEK DREXELBROOK

SCALE NONE
UNLESS OTHERWISE STATED ALL DIMENSIONS IN INCHES (MM)

DR. JEN 3-11-15
CK. TDH 3-11-15

AMETEK®
DREXELBROOK
205 KEITH VALLEY RD
HORSHAM, PA 19044-9986
215-674-1234
FAX 215-674-2731

CONTROL DRAWING,
DUAL SEAL ASSEMBLY
FOR USE WITH
700 SERIES SENSING ELEMENTS

285-0003-0XX-CD SHT. 3 OF 3 ISS. 3

NO. 285-0003-0XX-CD SHT 3 OF 3

Appendix A

Appendix A: Shortening or Lengthening the Sensing Element

CAUTION:
The insulation length of either ***Flush Sensing Elements*** *or* ***Insulated Sensing Elements*** *can* ***NOT*** *be changed.* ***Cable Sensing Elements*** *can only be shortened. Instructions are included with each unit.*

The Need
Sometimes your application calls for probe lengths other than the standard 18-inch or longer insertion lengths supplied. Shortening the sensing element is quite simple and can be done in the field. Lengthening the sensing element, however, is more difficult because the metal rod, typically 304 SS or 316 SS, must be welded.

NOTE:
Cote-Shield element must ***NEVER*** *be modified.*

Before making any Adjustments:
1) Read the following instructions thoroughly.
2) Remove power.
3) Disconnect the electronics.
4) Protect electronics from any static discharge.
5) Protect electronics from any heat.

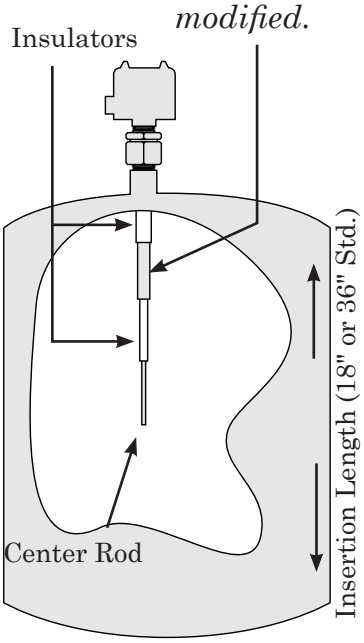

Shortening
The bare metal center rod of the sensing element can be shortened with a hacksaw. Be careful not to cut either of the two insulators. See Figure on this page.

In applications using conductive or water-based materials, shortening is not a problem. Leave a minimum bare metal center rod length of two (2) inches.

For dry granular materials, such as powder, sand, corn, clinker, etc., you must leave a minimum bare metal center rod length of eight (8) inches. Consult the factory before shortening beyond this point.

Lengthening
To lengthen the sensing element, an extension rod can be welded onto the end of the bare metal center rod. Make sure that the extension rod is the same metal as the sensing element.

An alternate option is to add a pipe coupling and a section of metal pipe after threading the tip of the sensing element. In this case, the metal pipe need not be identical to the metal of the sensing element.

NOTICE

Any changes to probe length after calibration requires re calibration to ensure proper operation.

CE Installation Supplement

EMC Installation Supplement

A. **Purpose:** To provide additional information that is required to be in compliance with the CE mark of conformity and 2014/30/EU Directive.

B. **Definitions:**

1. I/O Sensor/Measurement/Control Port -- Any port which provides level measurement, control, and/or DC power.

2. I/O AC Power -- Any port which provides AC main power to the instrument.

3. Housing -- Any enclosure where the sensor and transmitter can be located.

4. Non-metallic applications -- any application where the sensor is not surrounded by a metallic surface.

C. **Installation Specifics:**

1. **I/O Sensor/Measurement/Control Ports**

   – Wiring must be twisted pair and run in conduit or an equivalent shielded environment (i.e. shielded braid, cable, etc.).

   – The shield terminations must be grounded at the source and destination ports.

   – Wiring must be run separate from AC main power and/or any signal exceeding 75 volts DC or 50 volts AC.

2. **I/O AC Power Port**

   – Wiring must be run either in conduit or an equivalent shielded environment (i.e. shielded braid, cable, etc.).

   – The shield terminations must be grounded at the source and destination ports.

CE Installation Supplement (Continued)

3. **Remote Installations**

   – Sensor port must be connected to the transmitter port by one of the following means:

   - 401-16 Probe Filter
   - Coaxial cable run in conduit.
   - Triaxial cable.

4. **Housings**

   – All installations require the sensor and transmitter to be located in a closed shielded/metal housing (i.e. typically explosion-proof or weatherproof housings meet this requirement)

5. **Sensor Type/Mounting**

   – In all non-metallic applications the sensor must have a full concentric shield (i.e. needs to be considered when ordering).

   –The sensor/sensor condulet must be grounded locally either to a metal support structure or an equivalent earth ground.

. **Comments:**

– Any deviation from these installation requirements should be reviewed with factory, prior to implementation

– These instructions are essential to insure conformity with specified EC directives.

AMETEK, Inc.
TERMS AND CONDITIONS OF SALE

THE FOLLOWING TERMS/CONDITIONS, TOGETHER WITH ANY OTHER TERMS/CONDITIONS SPECIFICALLY AGREED TO IN WRITING BY SELLER, SHALL APPLY TO ALL ORDERS ("Order(s)") FROM, AND SALES OF PRODUCTS ("Products") OR SERVICES ("Services") TO BUYER. ANY ACCEPTANCE OF ANY ORDER OF BUYER IS CONDITIONED UPON THESE TERMS/CONDITIONS. ANY ADDITIONAL OR DIFFERENT TERMS/CONDITIONS PROPOSED BY BUYER IN ANY DOCUMENT ARE OBJECTED TO AND SHALL NOT BE BINDING UPON SELLER. No salesperson is authorized to bind Seller to any promise or understanding not expressed herein.

I. PRICES All prices are subject to change without notice in the event of any changes in cost of materials or labor, specifications, quantities, delivery schedules, customs duties, other factors beyond Seller's control, or in the event of delays caused by instructions of the Buyer, or failure of the Buyer to give Seller adequate information. Further, prices payable by the Buyer shall be subject to immediate increase, should the Seller as a result of governmental action or regulation including, without limitation, those contemplated by an investigation under Section 232 of the Trade Expansion Act of 1962 (19 U.S.C. §1862), incur additional duties, tariffs or restrictions on products sold hereunder, or on the raw materials that are used in making such products. In no event shall prices include any amounts imposed on the Buyer in connection with Buyer's purchases from Seller, such as taxes, including but not limited to Value Added Tax (VAT) or excise taxes, duties, tariffs, or any other costs assessed against the Buyer by a governmental authority.

II. DELIVERY Delivery dates are approximate and are dependent on prompt receipt by Seller of all necessary information. Seller may deliver all or any part of Products/ Services as early as 30 days in advance of agreed schedule. The point of delivery shall be "Ex-works" Seller's premises, unless otherwise specified by Seller. Upon delivery, title to Products and all risk of loss or damage thereto shall pass to Buyer. Where Buyer notifies Seller that it cannot take timely delivery of the Products, Seller may place such Products in storage, at the risk of Buyer, and Buyer shall reimburse Seller for all expenses incurred in connection with such storage. Buyer shall dispose of the packing materials for Products at its own expense, and shall defend, indemnify and hold harmless Seller from any legal obligations in connection with such packing waste.

III. PAYMENT A. The term of payment shall be net 30 days from date of Seller's invoice, unless otherwise specified. Payments shall be made by Buyer without any deduction or set-off. Unless otherwise agreed, payment shall be made in U.S. dollars. Seller may charge late payment fees at the rate of 1.5% per month, or the highest rate permitted by law, whichever is less, accruing daily.

B. If the financial condition of Buyer is unsatisfactory to Seller, Seller may require full or partial payment in advance, or satisfactory security, in the form of a letter of credit or otherwise. In the event of bankruptcy or insolvency of Buyer, Seller may immediately cancel any Order then outstanding.

C. Buyer grants Seller a purchase money security interest in Products located in the United States, or Services, as well as any proceeds, for the purpose of securing the obligations of Buyer hereunder. Buyer authorizes Seller to execute on Buyer's behalf and file such financing statements as Seller deems appropriate to perfect and notify Buyer's creditors of Seller's security interest.

IV. VARIATIONS IN QUANTITY; CHANGES. Buyer shall accept delivery of quantities greater or smaller than the quantity specified in Order(s), provided that any such variation shall not exceed 5% of the quantity originally specified, or 2 units, whichever is greater. Seller shall not be required to give notice of any such variations other than in the applicable shipping notice and invoice. Seller reserves the option to make changes to Products or Services which do not affect form, fit, or function, and shall deliver Products to the latest configuration part number at the time of delivery.

V. EXPORT CONTROLS; FCPA; ANTI-BOYCOTT

A. Buyer shall not make any disposition of the Products, by way of transshipment, re-export, diversion or otherwise, except as applicable U.S. export laws and regulations may expressly permit, and other than in and to the ultimate country of destination specified on Order(s) or declared as the country of ultimate destination on Seller's invoices or in the End Use Statement that Buyer supplies Seller. Seller shall not be named as shipper or exporter of record or U.S. principal party-in-interest (USPPI) unless specifically agreed to in writing by Seller in which case, Buyer shall provide Seller with a copy of the documents filed by Buyer for Export clearance purposes. At Seller's request, Buyer shall supply end-use and end-user information to determine export license applicability. Failure of Buyer to comply with this section shall constitute a material default allowing Seller to cancel related Order(s) without liability.

B. Buyer warrants that it shall not violate or cause the Seller to violate the U.S. Foreign Corrupt Practices Act of 1977 (FCPA), as amended, the United Kingdom Bribery Act (UKBA) of 2010, as amended, or their respective implementing regulations in connection with Buyer's sale or distribution of the Products and/or Services, and that Buyer does not know or have reason to believe that any consultant, agent, representative or other person retained by Buyer in connection with the sale and/or distribution of Products/Services has violated, nor caused Seller to violate the FPCA and/or the UKBA. Where Buyer learns of or has reason to know of any violation of FCPA and/or or UKBA in connection with the sale or distribution of Products/Services, Buyer shall immediately advise Seller.

C. Buyer further warrants that Buyer shall not violate or cause Seller to violate the U.S. Antiboycott Provisions of the U.S. Export Administration Regulations issued pursuant to the U.S. Export Administration Act of 1979, as amended, in connection with Buyer's purchase of Products/Services and that Buyer shall not request or require Seller to make statements or certifications against countries that are not subject to boycott by the U.S.

VI. WARRANTIES A. Seller warrants that Products manufactured by Seller, when delivered, shall be free from defects in material/workmanship. Seller warrants that Services shall be performed in accordance with generally accepted industry practice. Seller's obligations under this warranty shall be limited exclusively to repairing or replacing, at Seller's option, any part of Products which, if properly installed, used and maintained, proved to have been defective in material or workmanship within 1 year from the date of shipment, or re-performing the Services. Seller warrants for a period of 1 year from the date of shipment that software or firmware, when used with Products, shall perform in accordance with Seller's published specifications. Seller makes no warranty, express or implied, that the operations of the software or firmware shall be uninterrupted or error-free, or that functions contained therein shall meet or satisfy the Buyer's intended use/requirements. Buyer shall notify Seller of any defect in the quality or condition of Products (including software/firmware) or Services within 7 days of the date of delivery or performance, unless the defect was not apparent on reasonable inspection, in which case, within 7 days after discovery of the defect. If Buyer does not provide such timely notification, it shall not be entitled to reject Products (including software/firmware) or Services, and Seller shall have no liability for such defect.

B. Seller's warranty obligations shall not apply to Products which (1) have been altered or repaired by someone other than Seller, or (2) have been subjected to misuse, neglect, or improper use or application, or (3) are normally consumed in operation, or (4) have a normal life inherently shorter than the warranty period stated therein.

C. No Products may be returned unless authorized in advance by Seller, and then only upon such conditions to which Seller may agree. Buyer must obtain a Return Material Authorization (RMA) number from Seller prior to any return shipment, and such RMA number must appear on the shipping label and packing slip. Buyer shall be responsible for returned Products until such time as Seller receives the same at its facility, and for all charges for packing, inspection, shipping, transportation or insurance associated with returned Products.

D. This section VI sets forth the exclusive remedies and obligations for claims based upon defects in or nonconformity of Products/Services, whether the claim is in contract, warranty, tort (including negligence of any degree or strict liability) or otherwise. **THE FOREGOING WARRANTIES ARE IN LIEU OF ALL OTHER WARRANTIES,**

WHETHER ORAL, WRITTEN, EXPRESS, IMPLIED OR STATUTORY. NO IMPLIED OR STATUTORY WARRANTIES OF MERCHANTABILITY OR FITNESS FOR PARTICULAR PURPOSE SHALL APPLY.

VII. PATENTS/INDEMNITY If Buyer receives a claim that Products, or part thereof manufactured by Seller infringes a patent, Buyer shall notify Seller promptly in writing and give Seller information, assistance and exclusive authority to evaluate, defend and settle such claim. Where Buyer has furnished specifications/designs for the manufacture of the allegedly- infringing Products, Buyer shall defend, indemnify and hold harmless Seller against third-party claims for infringement arising out of Seller's use of such specifications/designs.

VIII. LIMITATION OF LIABILITY
The total liability of Seller on any claim, whether in contract, tort (including negligence of any degree and strict liability) or otherwise arising out of, connected with, or resulting from the manufacture, sale, delivery, resale, repair, replacement or use of any Products/Services, shall not exceed the price allocable to the Products/Services or part thereof which gives rise to the claim. **IN NO EVENT, WHETHER AS A RESULT OF BREACH OF CONTRACT, WARRANTY, TORT, (INCLUDING NEGLIGENCE OF ANY DEGREE, STRICT LIABILITY OR PATENT INFRINGEMENT) OR OTHERWISE, SHALL SELLER, ITS AFFILIATES, SUBCONTRACTORS, OR SUPPLIERS BE LIABLE FOR ANY LOSS OF PROFIT OR REVENUES, LOSS OF USE OF THE PRODUCTS OR SERVICES, OR ANY ASSOCIATED EQUIPMENT, COST OF CAPITAL, COST OF SUBSTITUTE GOODS, FACILITIES, SERVICES OR REPLACEMENT POWER, DOWNTIME COSTS OR CLAIMS OF BUYER'S CUSTOMERS FOR DAMAGES OR FOR ANY SPECIAL, PROXIMATE, CONSEQUENTIAL, INCIDENTAL, INDIRECT OR EXEMPLARY DAMAGES.** If Buyer transfers title to, or leases Products sold hereunder to, or otherwise permits or suffers use by, any third party, Buyer shall obtain from such third party a provision affording Seller and its subcontractors/suppliers the protection of the preceding sentence. Any action against Seller must be brought within 18 months after cause of action accrues.

IX. EXCUSABLE DELAYS A. Seller shall not be liable for delays in delivery or failure to perform due directly or indirectly to causes beyond Seller's reasonable control including but not limited to: acts of God; war; terrorism; civil commotion; riots; embargoes; government regulations, orders, instructions or priorities; port congestion; acts of or failure to act on the part of Buyer or its agents/employees; fires; floods; sabotage; nuclear incidents; earthquakes; storms; epidemics; strikes; lockouts or other labor difficulties; shortages of or inability to timely obtain proper labor, materials, components, shipping space or transportation, fuel, supplies or power at current prices; or due to limitations imposed by the extent of availability of Seller's normal manufacturing facilities.
B. If a delay excused per the above extends for more than 90 days and the parties have not agreed upon a revised basis for continuing providing Products/Services at the end of the delay, including adjustment of the price, then either party (except where delay is caused by Buyer, in which event only Seller) upon thirty (30) days' notice may terminate the Order with respect to the unexecuted portion of the Products/Services, whereupon Buyer shall promptly pay Seller its reasonable termination charges upon submission of Seller's invoices thereof.

X. SOFTWARE/TECHNICAL/PROPRIETARY INFORMATION
A. Buyer shall not acquire any rights to any software which may be delivered with Products, except as granted in Seller's standard software license. Any software license granted in connection with Products shall be an interim license, which may be withdrawn, pending payment for Products in full.
B. The purchase of Products shall not include any right to supply of technical information such as drawings or specifications.
C. Proprietary information, including drawings, documents, technical data, reports, software, designs, inventions and other technical information supplied by Seller in connection herewith (hereinafter called "Data"), shall remain Seller's sole property and shall be held in confidence by Buyer. Data shall not be reproduced, used or disclosed to others by Buyer without Seller's prior written consent. Upon completion of Order, Buyer shall promptly return all Data to Seller together with all copies or reprints thereof then in Buyer's possession or control, and Buyer shall thereafter make no future use, either directly or indirectly, of any Data or any information derived therefrom without Seller's prior written consent. The foregoing shall in no way obligate Seller to provide or supply Data.

XI. DIES, TOOLS, PATTERNS Seller's charges for dies, molds, patterns and the like represent the Buyer's proportionate cost thereof, it being expressly understood that they remain the property of Seller. Modifications made to dies, molds, patterns and the like in order to manufacture Products shall be at the discretion of Seller.

XII. GENERAL A. The rights and obligations of the Buyer and Seller hereunder shall be governed in all respects by the law of the Commonwealth of Pennsylvania, U.S.A. The exclusive forum for adjudication of any disputes shall be the federal or state courts of the Commonwealth of Pennsylvania, and Buyer/Seller hereby consent to personal jurisdiction and venue in such courts in any proceeding. The United Nations Convention on the International Sale of Goods shall not apply.
B. These Terms and Conditions of Sale together with any other terms specifically agreed to in writing by Seller constitute the entire agreement between Buyer and Seller and supersede any prior or contemporaneous representations, agreements, proposals, warranties, or understandings, oral or written, express or implied. No waiver, modification, amendment, rescission or other change to these Terms and Conditions of Sale shall be binding unless specifically agreed to in writing by an authorized representative of Seller.
C. The invalidity, of any part hereof shall not affect the validity of the remainder. The failure of Seller to assert any right at any time hereunder shall not prevent Seller's subsequent assertion of the same or different rights.
D. Buyer may not assign this contract without the prior written approval of the Seller.

XIII. PROHIBITION FOR HAZARDOUS USE
Products sold hereunder are not intended for application in, and shall not be used by Buyer in construction or application of a nuclear installation or in connection with use or handling of nuclear material or for any hazardous activity or critical application, where failure of a single component could cause substantial harm to persons or property, unless Products have been specifically approved for such activity or application. Seller disclaims all liability for loss or damage resulting from such unauthorized use and Buyer shall defend, hold harmless and indemnify Seller against any such liability, whether arising under breach of contract, warranty, tort (regardless of the degree of fault or negligence), strict liability or otherwise.

Where Seller approves the application of the Products in a nuclear facility, the Buyer shall, before such use or provision, arrange for insurance or governmental indemnity protecting the Seller against liability and hereby releases and agrees to indemnify the Seller and its suppliers for any nuclear damage, including loss of use, in any manner arising out of a nuclear incident, whether alleged to be due, in whole or in part to the negligence or otherwise of the Seller or its suppliers.

XIV. STATUTORY REQUIREMENTS
Seller reserves the right to make any changes in the general specifications of the Products which are required for the Products to conform to any statutory requirement.

XV. GOVERNMENT CONTRACTS
Only Federal Acquisition Regulation ("FAR") supplement clauses expressly accepted in writing by Seller shall be included or incorporated by reference herein. Seller shall not be bound by and makes no representation of compliance with any FAR or FAR supplement clauses that Seller shall not have expressly accepted in writing.

AMETEK®
DREXELBROOK

An ISO 9001 Certified Company

RMTXX1-LM Issue 15
EDO# 05-19-110

205 Keith Valley Road, Horsham, PA 19044
Telephone: +1 215-674-1234
Fax: +1 215-674-2731
E-mail: drexelbrook.info@ametek.com
Website: www.drexelbrook.com