AMETEK®
DREXELBROOK

The Leader of RF
and Sonic Level

For Assistance Call 1-800-527-6297
Outside North America Call + 215-674-1234

Installation and Operating Instructions

Series 508-004X
Universal II Transmitter
using 408-8200 Electronics

+ 215-674-1234 Outside North America
1-800-553-9092 US and Canada
www.drexelbrook.com
drexelbrook.service@ametek.com

408-8200-LM
EDO# 1-14-126
Issue# 6

Series 508-4X
Universal II Transmitter
using 408-8200 Electronics

AMETEK®
DREXELBROOK
An ISO 9001 Certified Company

205 Keith Valley Road Horsham, PA 19044
US Sales 1-800-553-9092
24 Hour Service 1-800-527-6297
International + 215-674-1234
Fax + 215-674-2731
E-mail drexelbrook.info@ametek.com
Web www.drexelbrook.com

Table of Contents

Table of Contents (cont.)

SECTION 1- INTRODUCTION

The instructions in this manual are for the Drexelbrook 508-4X-XX Series Universal II system for level measurement in liquids, slurries, interfaces and granulars.

1.1 System Description

Each Drexelbrook 508-4X-X Universal II system Consists of a 408-8200 Series two-wire, 4-20 mA electronic unit and a 700 series sensing element (probe). Most 508-4X-XX Universal II systems are available in either integral or remote applications. A 380 series connecting cable is also supplied for remote systems.

The system model numbers indicate the application where they most often will be used:

508-0045-XXX: For conducting liquids
508-0046-XXX: For liquid/liquid interfaces
508-0047-XXX: For insulating liquids
508-0049-XXX: For granular solids

The final digits in the system model number refer to the type of 700 Series sensing element used.

The 508-004X-XXX is an admittance-to-currenttransducer. A change in level produces a change in admittance which results in a change in current. It is termed a two-wire transmitter because the same two wires used to power the unit also indicate the change in level (4-20mA). See Figure 1-1.

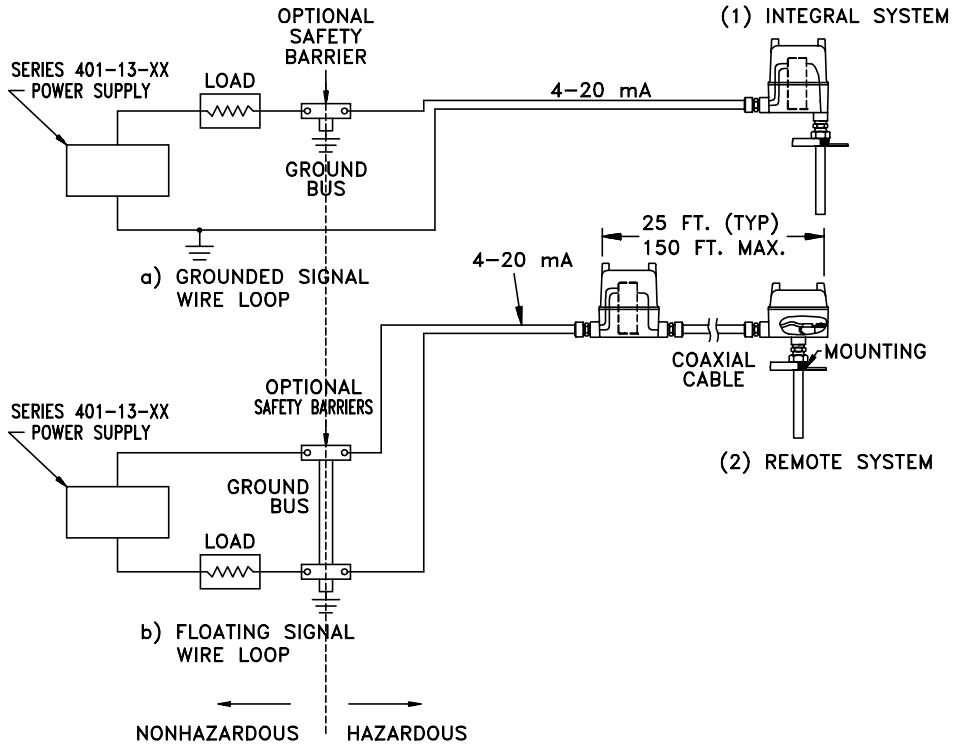

Figure 1-1
Universal II Block Diagram

1.2 Models Available

1.2.1 Electronic Chassis

The following is a partial list of the various 408-82X2 Series chassis models available:

408-8202-001 — Basic electronic unit intended for use with insulating materials, interfaces, and semi-conducting granulars.

408-8232-001 — Basic electronic unit (408-8200) internally connected for use with conductive materials and certain insulating granulars.

408-82X2-001 — Time delay option included.

1.2.2 Housings

The 408-8200 Series electronic units are available in a NEMA 4 or explosionproof housing. A "1" in the last position of the electronic unit number indicates chassis only, no housing. Example, 408-82XX-0X1 means chassis only. The standard housing meets the following NEMA classifications:

NEMA	
1	General Purpose
2	Drip Tight
3	Weather Resistant
4	Waterproof
4X	Waterproof/Corrosion Resistant
7	Explosionproof
9	Dust/Ignitionproof
12	Industrial use: oil and dust-tight

1.2.3 Sensing Elements

For identification, the last digits of the sensing element model number are stamped into the mounting gland or flange. Certain sensing elements are identified with a tag. If you have additional questions about sensing elements, contact the factory or your local representative.

1.2.4 Connecting Cables

When necessary to avoid excessive temperatures and vibration, the electronic unit and sensing element can be connected by a three-terminal coaxial cable. Drexelbrook cables are available in:

General Purpose: 380-0XXX-012
High Temperature: 380-0XXX-011
Composite: 380-0XXX-018
(first 10 feet high temperature)

The XXX in the model number indicates the length of the cable in feet. 25 feet is standard (e.g. 380-025-12), but longer and shorter lengths are available. Cable can also be purchased in bulk lengths with termination kits. Consult factory for maximum recommended lengths per specific applications

1.3 Technical Specifications

1.3.1 Electronic Unit (typical)

A. Power requirement: 11.5 to 50 Vdc

B. Input range: 408-8202: 3.75 to 40,000pF; 408-8232: 6 to 40,000pF with 5 ft. of cable.

C. Output range: 4-20 mA

D. Linearity: ±0.25%.

E. Load resistance:

$$\frac{Vs-11.5^*}{.02}$$ (i.e. max 625 @ 24Vdc).

*Where Vs = power supply voltage.

F. Temperature effect: ±0.25% of full scale per 30°F or ±0.1 pF whichever is larger.

G. Supply voltage effect: 0.2% max. from 11.5 to 50 Vdc.

H. Effect of load resistance: 0.2% or less for full resistance range at 24 Vdc supply.

I. Response to Step Change: 0.5-30 seconds standard (to 90% of final value)

J. Fail-Safe: Field adjustable. Low-Level Fail-Safe (LLFS) is default. Also called direct acting because current increases as the level increases. High-Level Fail-Safe (HLFS). Also called reverse acting because current decreases as level increases.

NOTE: There are no devices that are absolutely “fail-safe”. “Fail-safe”means that in the event of the most probable failures, the instruments will fail safely. Examples of “most probable failures” are loss of power and most transistor and component failures. If your application needs absolute fail-safe, a backup instrument should be installed.

K. Ambient temperature: -40° to +150°F (-40° to 65°C) at 24 Vdc.

L. Calibration Adjustments: Step Zero, Fine Zero, Step Span, Fine Span, Time Delay.

M. Lowest permitted resistance (bare sensing element to ground) causing 5% error in each model:

600Ω - 8202
100KΩ - 8232

All transmitters are KEMA approved: EEx ia IIC T4. All sensing elements are certified EEX ia II C T6--T3. 5-inch housings are IP 65.

NOTE
Wiring drawings for KEMA-approved units are provided in the appendix of this manual.

N. Cable Length: 150 feet maximum.

O. Independence of zero and span: ±1% maximum.

P. RFI Protection: Inherent with unit against standard walkie-talkie interference; 5 ft. standard distance with proper installation.

1.3.2 Three-Terminal Cable

A. General Purpose:
380-0XXX-012: .51" OD at largest point, 160°F temperature limit.

B. Composite Cable (first 10 feet high temperature):
380-0XXX-018: .62" OD at largest point, 450°F temperature limit for first 10 ft. 160°F temp limit for remainder.

C. High Temp. Cable 380-0XXX-011: .51" OD at largest point. 450°F temperature limit.

SECTION 2 - INSTALLATION

2.1 Unpacking

Carefully remove the contents of the carton and check each item against the packing list before destroying any packing material. If there is any shortage or damage, report it immediately to the factory.

2.2 Mounting the Electronics

The 408-8200 Series system was designed for field mounting, but it should be mounted in a location as free as possible from vibration, corrosive atmospheres, and any possibility of mechanical damage. For convenience at start-up, mount the instrument in a reasonably accessible location. Ambient temperatures should be between -40°F and 140°F. (-40° and 60°C). See Figure 2-1.

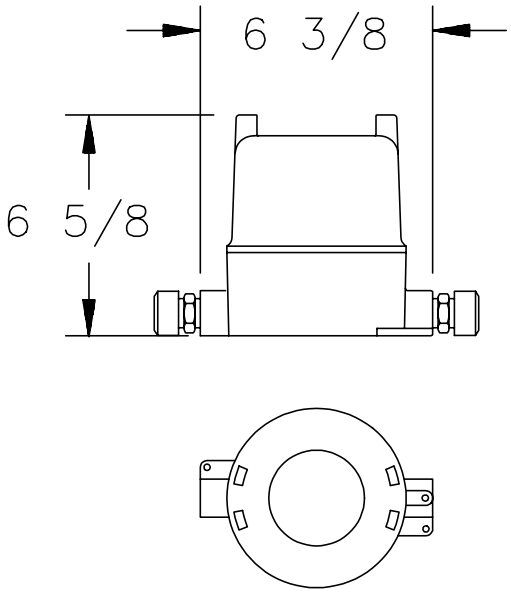

Figure 2-1B
Typical Mounting Dimensions
(Remote Unit)

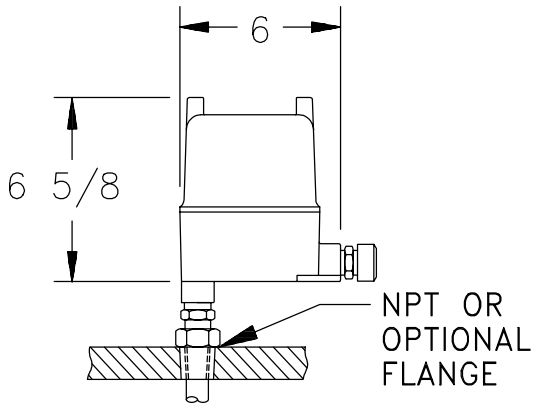

Figure 2-1A
Typical Mounting Dimensions
(Integral Unit)

2.3 Mounting the Sensing Element

The mounting location for the sensing element (probe) is often determined by the placement of nozzles or openings in the vessel. The sensing element should not be placed in a fill stream. When there is no suitable location inside a vessel, an external side arm or stilling well can be considered.
The following sensing element mounting and installation instructions should be followed so that the equipment will operate properly and accurately:

A. In applications requiring an insulated sensing element, use particular care during installation. There is always the danger of puncturing the insulating sheath, especially with the thin-walled, high capacitance probes.
B. Sensing elements should be mounted in such a manner that they are not in the direct stream of a filling nozzle or chute. If this is not possible, a deflecting baffle should be installed between the probe and the fill.

C. Do not take a sensing element apart or loosen the packing glands.

D. Tighten the sensing element with the wrench flats nearest the mounting threads.

CAUTION

Avoid using single-part RTV (silicone rubber) sealant in the probe or instrument housing. The single-part sealants frequently contain acetic acid and cause corrosion of circuit components. Special two-part sealants (non-corrosive) are available. Consult factory for types of recommended two-part sealants.

2.4 Wiring the Electronic Unit

The signal connections are made to the three terminal block on the front of chassis. Due to the low power consumption of the instrument, the wiring need only be light gauge (e.g. 20 AWG). See Figure 2-2 for proper connections. Twisted shielded pair cables are recommended for lengths over 200 feet.

The cable from the sensing element is connected to the black, four terminal strip on the back of the instrument chassis. See Figure 2-3. The cable connections are center wire (CW), ground (gnd), and shield (SH).

Only coaxial cables supplied by Drexelbrook Engineering Company should be used to connect the transmitter to the sensing element. Use of other cables can result in unstable calibration.

Note

For wiring in Explosion Hazard Areas, refer to Appendix for wiring diagrams.

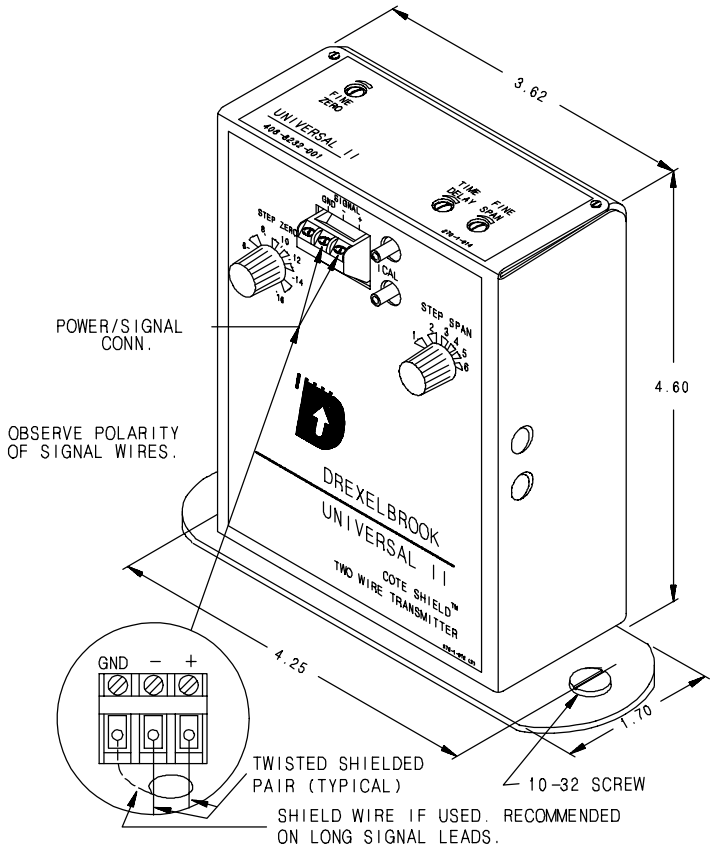

Figure 2-2
Power/Signal Connections

CAUTION

Before using Intrinsic Safety Barriers, read the manufacturers instructions for barrier operation.

The 408-8200 has a built-in current limiter which holds the signal current to a maximum of 28 mA. Make sure that the voltage applied to the barrier will not exceed the barrier voltage rating, if barriers are used.

2.4.1 Ground Wiring

The 408-8200 series transmitters have Radio Frequency Interference (RFI) filtering built into the unit. In order to be effective, The electronic unit condulet (housing) must be grounded to low impedance earth (ground) rod in the vicinity of the transmitter. The vessel wall also needs to be grounded to reduce interference through the sensor. If using a non-metallic vessel, consider concentrically-shielded sensors or external RFI filtering. Further, improvement is generally obtained by placing the sensor cable in a grounded metal conduit and shortening any excess cable. In particularly troublesome RFI situations, additional RFI filtering may be required. Contact the factory for more information.

2.4.2 Ground Wiring in Fiberglass Housings

When the transmitter is mounted in a fiberglass housing, be sure that an earth ground is carried through the fiberglass housing and put in contact with the "sprayed in" metallic coating on the inside of the housing. This coating provides additional RFI filtering. Additionally, the ground wire should be connected to the transmitter ground terminal. See Figure 2-2.

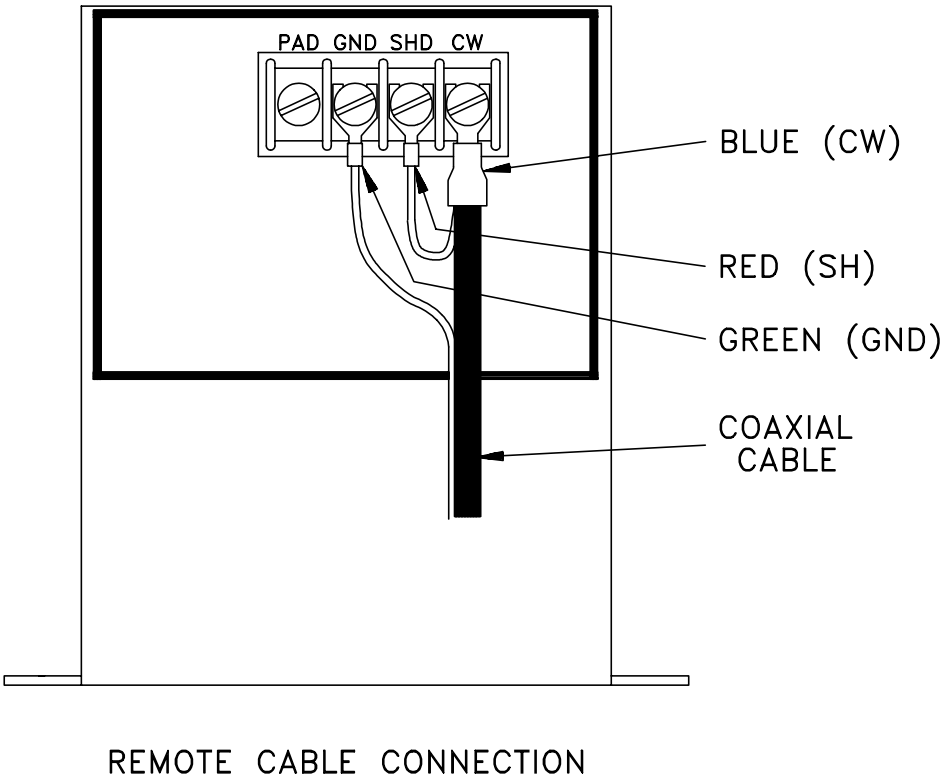

Figure 2-3
Cable Connections to the Transmtter

2.5 Sensing Element Connections (Remote System)

The cable connections to the sensing element are shown in Figures 2-5A and 2-5B. Do not connect the cable to the sensing element until after the sensor has been installed in the vessel and the condulet housing has been screwed on securely. If your probe does not have a shield connection, be sure to clip and/or tape the shield wire at the probe end of the cable.

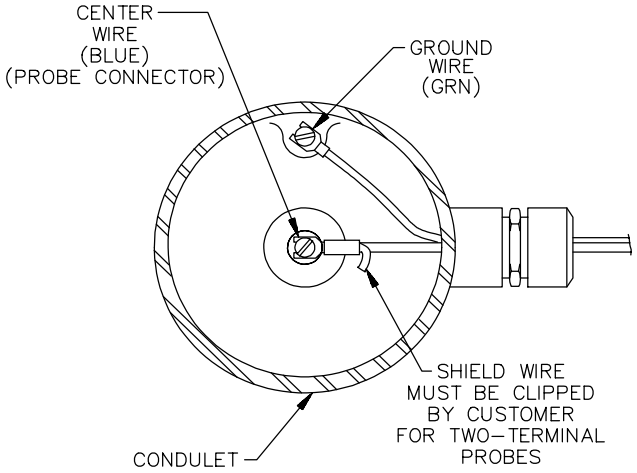

Figure 2-5A
Three-Terminal Cable Connections to Two-Terminal Sensing Element

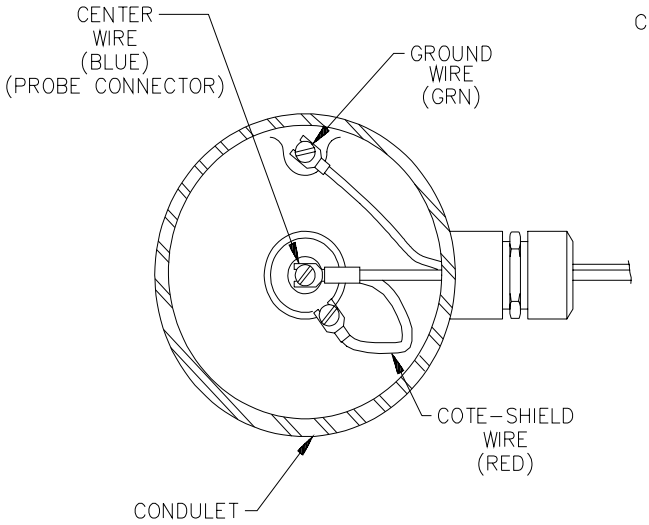

Figure 2-5B
Three-Terminal Cable Connections to Three-Terminal Sensing Element

If spark protection is supplied (for special applications, consult factory), use the following instructions for installing the spark protector in the sensing element condulet: (See Figure 2-6.)

A. Attach the mounting link on the spark protector to the probe center connection screw.

B. Connect the green wire from the spark protector to the ground screw.

C. Feed the cable into the condulet.

D. Connect the cable center wire (CW) to the spark protector and the ground wire (gnd) to the ground screw as shown.

E. Connect the shield wire to the Cote-Shield terminal (SH).*

*For sensing elements that Do not have Shield connections, clip the shield wire as shown in Figure 2-6.

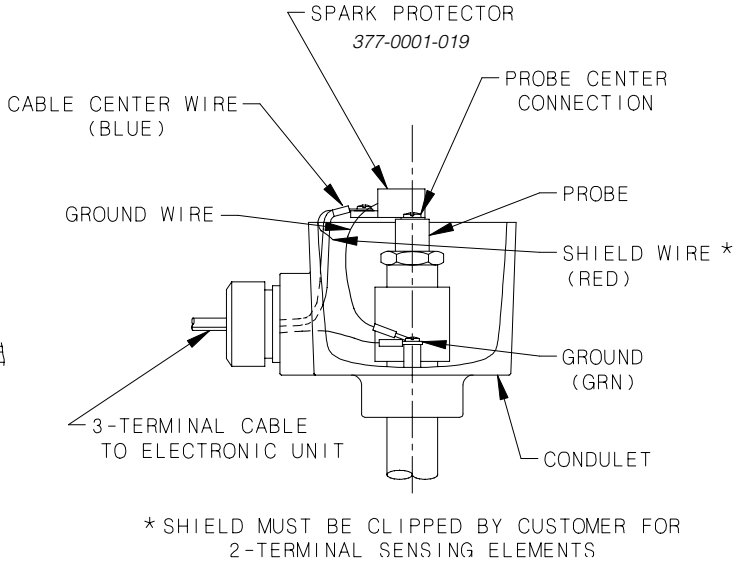

Figure 2-6
Typical Spark Protection (Remote System)

2.6 Sensing Element Connections (Integral System)

In an integral system, there is no cable. Therefore, the connections to sensing element are made directly to the electronic unit. Refer to Figures 2-7A and 2-7B.

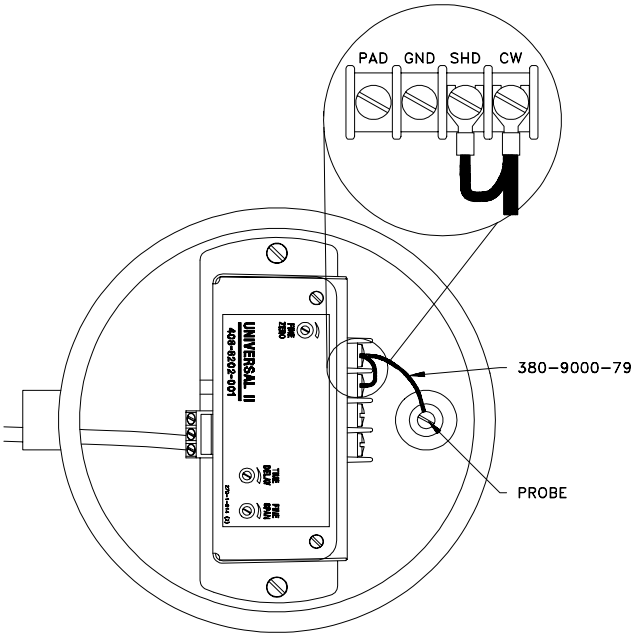

Figure 2-7A
Integral-Mount Sensing Element Connection

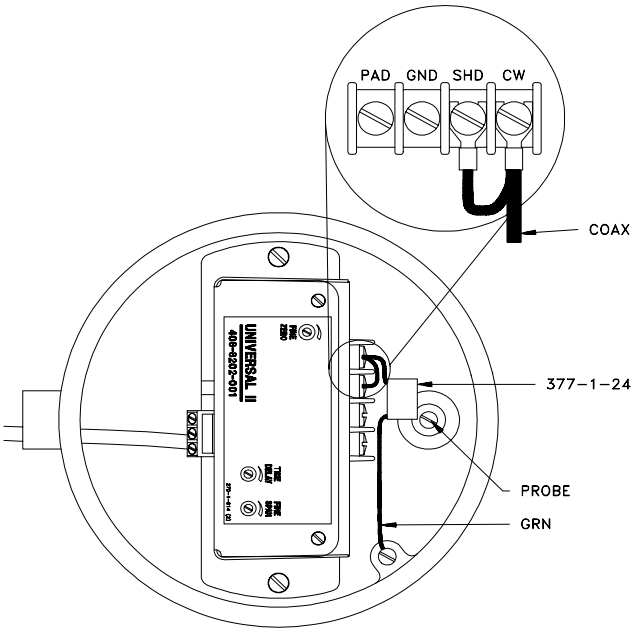

Figure 2-7B
Integral-Mount Sensing Element Connection with Spark Protection

2.7 Intrinsic Safety Barriers - Installation with Drexelbrook Continuous Instruments

A typical installation of a single intrinsic safety barrier is shown in Figure 2-8. A single barrier installation is usually rated for operation at 24-26V with a maximum of 80 mA. The barrier will typically start limiting the current at 26 mA. Drexelbrook recommends that a current-limiting, rather than a trip type barrier be used in the installation. The reason for this approach is that a trip-type barrier must be reset by breaking the loop power to reset the barrier. The inadvertent tripping often occurs during calibration. This condition does not occur with a current-limiting style barrier.

Single-Barrier Installations (Figure 2-8)

When using barriers, an important consideration is the overall loop resistance. Using a standard 24 Vdc power supply, the maximum loop resistance is 1200 ohms. Each 50 ohms in a loop uses 1 Vdc. A typical Drexelbrook transmitter requires a minimum of 11.5 Vdc, leaving 12.5 volts for the loop and a maximum load in the loop of 625 ohms. All of the loop resistance must be totaled to determine the remaining resistance that can be used by a barrier. Usually a “positive” barrier in a loop has a resistance of between 200 and 250 ohms, leaving approximately 400 ohms for other items in the loop.

2-Barrier Installations (Figure 2-9)

In certain instances, it is desirable that two barriers be used in an installation, such as when the signal is being fed to a microprocessor input card. A two-barrier installation allows the loop to float relative to ground. When this condition exists, it is very important that the loop resistance is checked to be sure that sufficient voltage is available for correct transmitter operation. As shown in Figure 2-9, if two barriers are used, each having an

internal resistance of 250 ohms, there would be only 125 ohms available for all other devices. To gain additional resistance, change the return (negative leg) barrier to a lower voltage type, e.g. rating of +6V. Normally the barriers have a resistance of approximately 12.5 ohms + 2V. By lowering the voltage type, the overall effective resistance would be 312.5 ohms, which allows an additional 312.5 ohms in the loop.

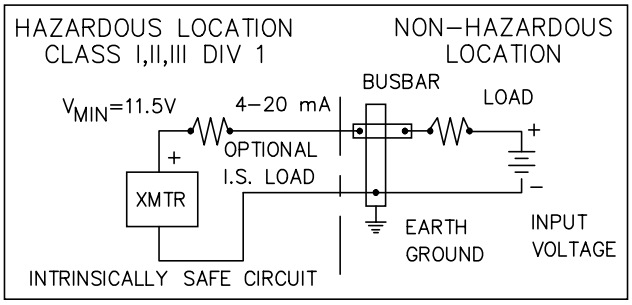

Figure 2-8
Single Barrier Installation

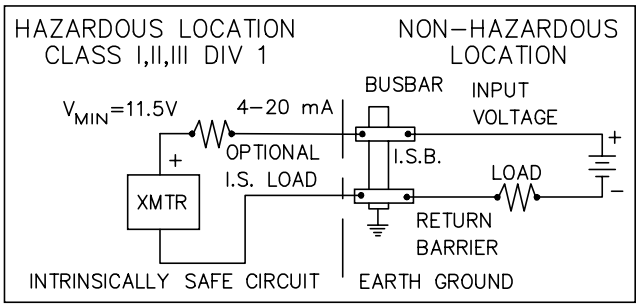

Figure 2-9
Two-Barrier Installation

2.8 Surge Voltage (Lightning) Protection

Optional surge protection is sometimes supplied with transmitters that are expected to be exposed to surges or lightning on the two-wire loop. A Drexelbrook Model 377-4-12 Surge Voltage Protection affords a great deal of protection to the transmitter but is not absolute in its protection against a very close lightning strike.

2.9 RFI (Radio Frequency Interference) Filters

When installing the Universal II transmitter, follow these recommendations to avoid problems with Radio Frequency Interference.

- Mount the electronic unit at least 6 feet (2M) from a walkway where personnel using walkie talkies may pass.
- If the vessel is non-metallic, select a shielded (concentric) sensor.
- For remotely-mounted electronic units connect the sensor to the electronic unit by placing the coaxial cable in grounded metal conduit. Integrally mounted electronic unit sensor connections are already shielded.
- Use Twisted Shielded Pair wiring for all loop wiring connections. Loop connection wiring should also be in grounded metallic conduit.
- Where possible, use of cast aluminum housings without windowed openings for the electronic unit is recommended. If local close-coupled indicators are used, install a loop filter between the indicator and the electronic unit.

Ground the electronic unit and housing with a minimum of 14 gauge wire to a good earth ground. Make sure that conduits entering and leaving the housing have a good electrical ground connection to the housing

If the recommendations listed above are followed it is usually **not** necessary to add RFI filtering to protect against signal strengths of 10 Volts/ Meter or less. This degree of protection is usually sufficient to protect against walkie talkies that are used 3 feet (1M) or more from a typical electronic unit. If greater protection is required, or filters have already been provided, install RFI filters. Consult factory.

SECTION 3 - CALIBRATION

3.1 Controls and Adjustments

3.1.1 Zero and Span Controls

There are two main controls on the chassis front panel. They are the Step Zero, and Step Span controls. The Fine Zero and Fine Span controls are located on the top of the chassis. See Figure 3-1.

The Step Zero and Fine Zero controls work together to provide continuous adjustment of the minimum current point. Each Step Zero position advances the minimum current point approximately 25 pF, while the Fine Zero provides continuous adjustment between each step.

NOTE

Under normal circumstances, the interaction between zero and span should be less than 1%. If this interaction becomes greater than 1%, consult factory for assistance.

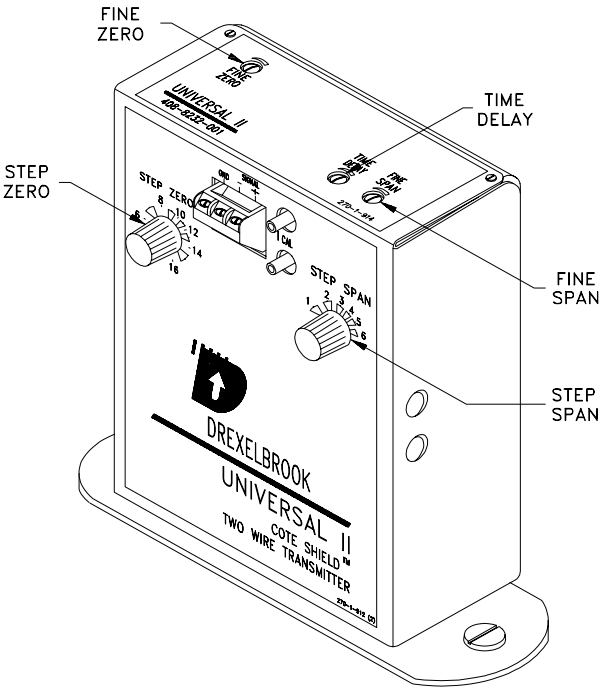

Figure 3-1
Zero and Span Controls

The Step Span and Fine Span controls also work together to provide continuous adjustment of the change in capacitance required to produce full scale current. Each Step Span position advances the range in inches or feet to approximately five times the previous setting. The Fine Span provides continuous adjustment between the Step Span positions.

3.1.2 Time Delay Control and Loop Current Testpoints

Time delay is standard on this transmitter. See Figure 3-2. It is an RC time constant circuit that is variable over a range of 0.5 to 30 seconds. For most applications requiring damping, five or ten seconds is usually sufficient. Calibration of the transmitter is done with the time delay turned off (full CCW).

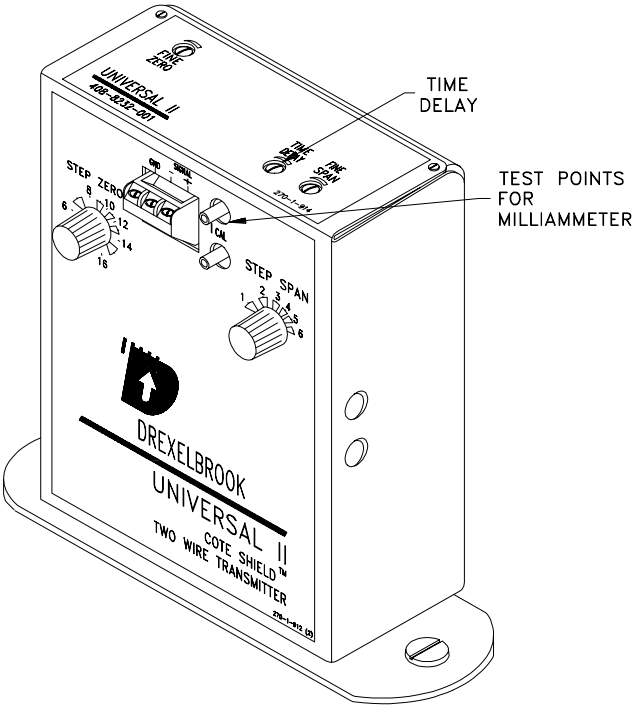

Figure 3-2
Time Delay Unit

After calibration is complete, a time delay can be added, without affecting the calibration, by turning the control knob clockwise. Occasionally, when the time delay is first turned on, there is a temporary upset in the transmitter output until the circuit settles out. Two testpoints are provided so that loop current can be monitored without breaking the loop with a standard analog or digital multimeter set to measure 0 to 20 mA.

3.1.3 Below-Chassis Adjustments

There are two adjustments in the chassis that are set by the factory and normally do not need to be changed. However, if necessary, they may be reset by field personnel. They are the fail-safe selector and a modification procedure for changing the 408-8202 to a 408-8232.

A. Fail-Safe Selector

The fail-safe selector determines whether increasing or decreasing level will cause the output current to increase. It is a movable link located on a printed circuit board on the inside of the chassis. See Figure 3-3.

The instrument is supplied with the more common low-level fail-safe unless otherwise specified. Low Level Fail Safe (LLFS) provides increasing current signal with increasing level. (See description in subsequent paragraph.) The fail-safe can be changed in the field, after which the unit must be recalibrated.

To change the fail-safe of the instrument, take the chassis out of the condulet by turning the two captive chassis mounting screws CCW and lifting unit up. See Figure 3-4.
Note position of step zero and step span switches for proper re-assembly.
Remove the two knobs

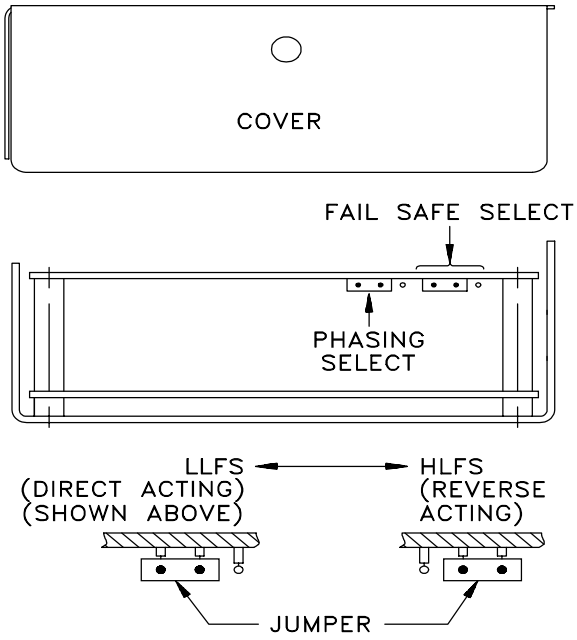

Figure 3-3
Fail-Safe Link

using an allen wrench, then remove the two screws on the top of the unit to remove unit cover. Change the 3-terminal jumper that is closest to the bottom of the PC board as shown in Figure 3-3. When link has been changed, re-assemble unit cover and knobs and install unit in condulet.

Low-Level Fail-Safe is also called DIRECT-ACTING. This is the most commonly used fail-safe position FOR CONTINUOUS INSTRUMENTS. Output CURRENT INCREASES as the LEVEL INCREASES. (Exception being inverted interface, see Section 3.3.3). In the event of most probable failures, the output current will drop and indicate LOW LEVEL.

High-Level Fail-Safe is called REVERSE ACTING. Output CURRENT INCREASES as the LEVEL DECREASES. In the event of most probable failures, output current will drop indicating HIGH LEVEL.

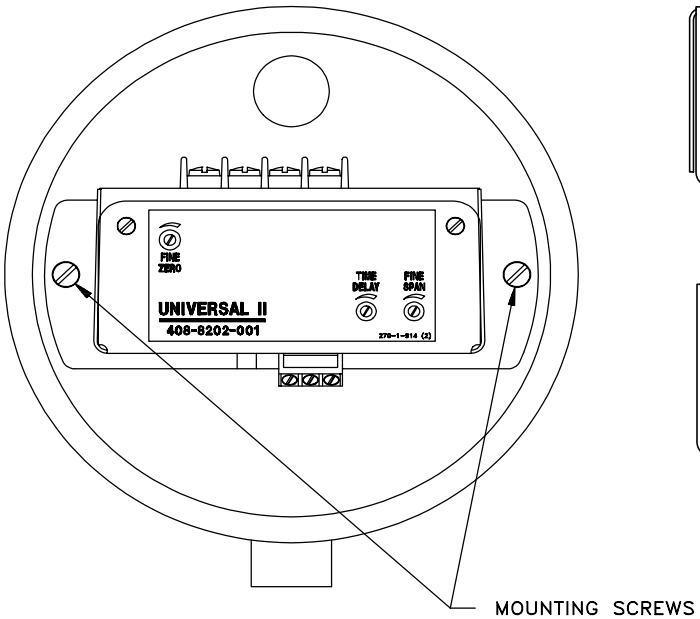

Figure 3-4
Electronic Unit in Typical Housing

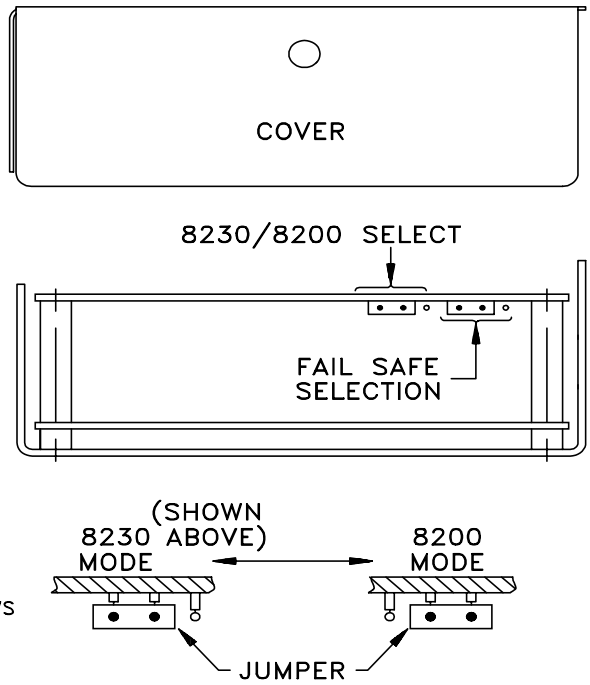

Figure 3-5
Modification Procedure for 408-8230

B. 408-8230-XX Modification Procedure

The following procedure can be used to modify a basic 408-8200 electronic unit to a 408-8230 electronic unit. See Figure 3-5. It should only be used when the application makes it necessary. Consult Factory.

Take the chassis out of the condulet by turning the two chassis mounting screws CCW and lifting unit up. See Figure 3-4.

Note the position of step zero and step span switches for proper reassembly, remove the two knobs using an allen wrench, then remove the two screws on the top of the unit to remove unit cover. The phasing link is the 3-terminal jumper nearest the middle of the PC board as shown in Figure 3-5. When the phasing link has been changed, re-assemble unit cover and knobs, and install unit in condulet. To convert a 408-8230 unit to a 408-8200 unit, follow the preceding instructions in reverse. After modification, recalibration (paragraph 3.4.2) should be performed.

3.2 Start-Up

Before applying power to the instrument, be sure that the input power will be from 11.5 to 50 VDC. Check all wiring connections, observing polarity of the output loop. (Unit will not function if polarity is reversed.

Caution: Explosionproof Units in Hazard ous Areas: Before the explosionproof condulet cover is removed to calibrate the instrument, the area must be checked and known to be nonhazardous if barriers are not used. When calibration is complete, replace the condulet cover. Each lead from the explosionproof case must be equipped with an approved seal fitting.

Avertissement: Risque D'Explosion: Avant de deconnector l'equipment, couper le courant ou s'assurer que l'emplacement est designe non dangereux.

3.3 Calibration Procedures

NOTE: If the transmitter has been precalibrated at the factory, do not recalibrate.

The calibration instructions for the 408-8200 Series transmitter are divided into three major application categories with different methods in each category. The three calibration categories are immersion applications, proximity applications, and interface applications.

3.3.1 Immersion Applications (See Figure 3-6)

A. Immersion - Direct Acting (LLFS) (Output rises as material rises.)
Calibrating the instrument in an immersion application for low-level fail-safe is the most commonly used method.

1) With fail-safe link in "DIR" position, (factory pre-set unless unit is ordered high level, see Section 3.1.3), set Fine Zero and Fine Span to extreme counterclockwise position. See Figure 3-7.

2) Set Step Span and Step Zero to Position #1.

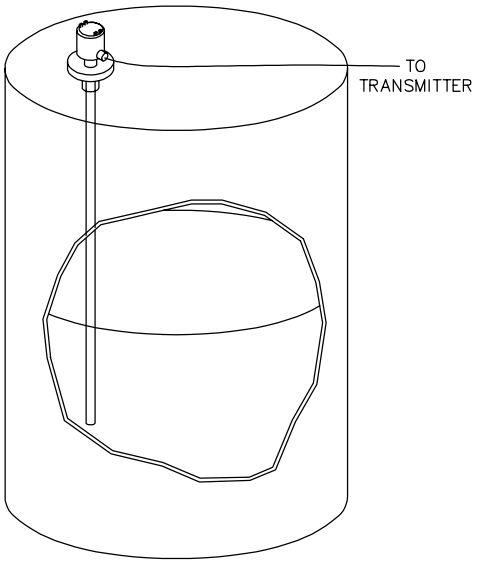

Figure 3-6
Immersion Application

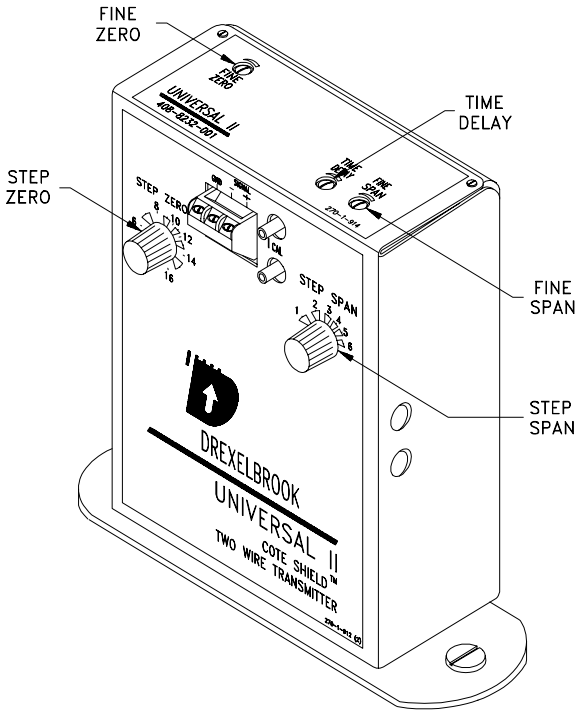

Figure 3-7
Zero and Span Controls

3) With the vessel empty (or probe uncovered), adjust the Step Zero control clockwise, if necessary, until the output is less than 4 mA.

4) Turn Fine Zero control clockwise until output is exactly 4 mA.

5) Fill the vessel (or raise the level as much as possible). Output current will typically exceed full scale current.

6) Turn the Step Span control clockwise until the output is less than full scale. (If current did not exceed full scale in Step 5), then leave Step Span in Position #1.)

7) Turn the Fine Span control clockwise until the output is full scale (20 mA) or reading actual level.

Calibration is now complete. Record the capacitance values that produce 4 mA and 20 mA outputs. Refer to paragraph 3.4.1 to use a capacitance calibration standard.

B. Immersion - Reverse Acting (HLFS) (Output falls as material rises.)

1) Set the Fail-Safe link in the "REV" position See Section 3.1.3.

2) Set Fine Span and Fine Zero controls to extreme counterclockwise position. See Figure 3-7.

3) Set Step Span and Step Zero to Position #1.

4) With the material at the upper operating level, adjust the Step and Fine Zero controls until the output is 4 mA. For this calibration procedure, a compensation capacitor is usually required to obtain the minimum 4mA output. It will be added by the factory when the application is known. If needed and not supplied, add-in 100 pF steps: an NPO capacitor across Terminals PAD and CW until the minimum output can be obtained. See Figure 3-10 or call factory service for value.

5) Lower the material to the minimum operating level. Output current will typically exceed full scale.

6) Turn the Step Span control clockwise until the output is less than full scale. (If current did not exceed full scale in Step 5), leave Step Span in Position #1).*

7) Turn the Fine Span control clockwise until the level is full scale (20 mA) or actual level.*
Calibration is now complete.

*If output is less than full scale, a higher sensitivity instrument may be required. Consult factory.

3.3.2 Proximity Applications

In applications where the product being measured is an insulator, it may be necessary to install a ground plate just below the product lower level. This ground plate should be at least 25% larger than the sensing plate and electrically connected to ground. The ground plate need not be a solid plate. It could be a series of rods, spaced apart, enclosing the same areas as a plate. Consult factory.

There are two different methods for calibrating your instrument for a proximity application. See Figure 3-8. Set the instrument for either low-level or high-level fail-safe.

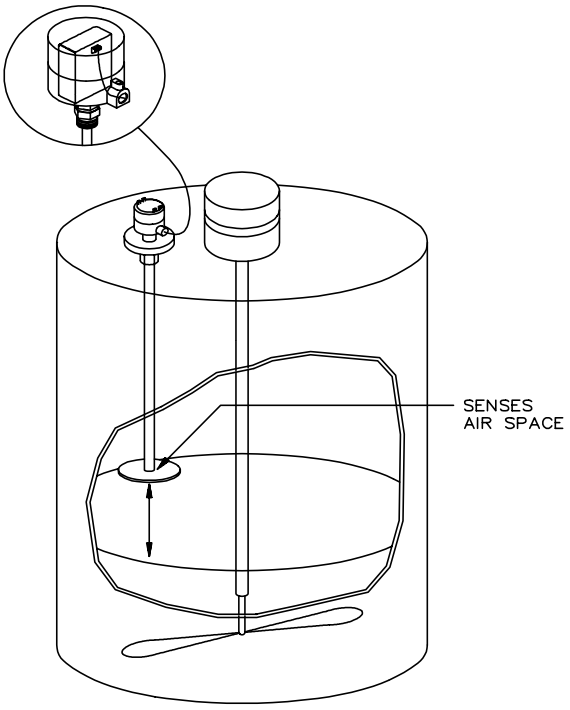

Figure 3-8
Proximity Application

A. Proximity - Direct Acting (LLFS) (Output rises as material rises.)

1) Be sure fail-safe link is in "DIR" position. See Section 3.1.3.

2) Set Fine Span and Fine Zero controls to extreme counterclockwise position. Do not force. See Figure 3-7.

3) Set Step Span and Step Zero to Position #1.

4) With the material at the lower operating level, adjust the Step and Fine Zero controls until output is minimum (4mA).

5) Raise the material to the upper operating level, but not touching the probe plate. Output current will typically exceed full scale current.

6) Turn the Step Span control clockwise until the output is less than full scale. (If current did not exceed full scale in Step 5, leave Step Span in Position #1).*

7) Turn the Fine Span control clockwise until the output is full scale (20 mA) or actual level.*

Calibration is now complete. (Note that proximity applications are non-linear.)

*If output is less than full scale, a higher sensitivity instrument may be required. Consult factory.

B. Proximity - Reverse Acting (HLFS) (Output falls as material rises.)

1) Be sure Fail-Safe link is in "REV" position. See Section 3.1.3.

2) Set Fine Span and Fine Zero controls to extreme counterclockwise position. Do not force. See Figure 3-7.

3) Set Step Span to Position #1.

4) With the material at the upper operating level (but lower than the probe plate), adjust the Step and Fine Zero controls until the output is minimum (4 mA).

5) Lower the material to the lower operating level. Output current will typically exceed full scale.

6) Turn the Step Span control clockwise until the output is less than full scale. (If current did not exceed full scale in Step 5), leave Step Span in Position #1).*

7) Turn the Fine Span control clockwise until the level is full scale (20 mA) or actual level.*

Calibration is now complete.

*If output is less than full scale, a higher sensitivity instrument may be required. Consult factory.

3.3.3 Interface Applications

All level control applications are actually interface measurements. The most common being the interface of air and product. The term interface generally refers to the interface of two immiscible liquids (liquids that don't mix).

For the purpose of level control, two types of interface are considered. The first and more common is called normal interface. An interface is considered "normal" when the lower product has the higher conductivity (i.e. oil and water). The other type of interface is called inverted interface. In an inverted interface, the upper-phase product has the higher conductivity, indicating the insulating phase is heavier than water.

There are four separate methods for calibration in interface applications. (See Figure 3-9.) They are normal interface in either high- or low-level fail-safe, and inverted interface in high- and low-level fail-safe.

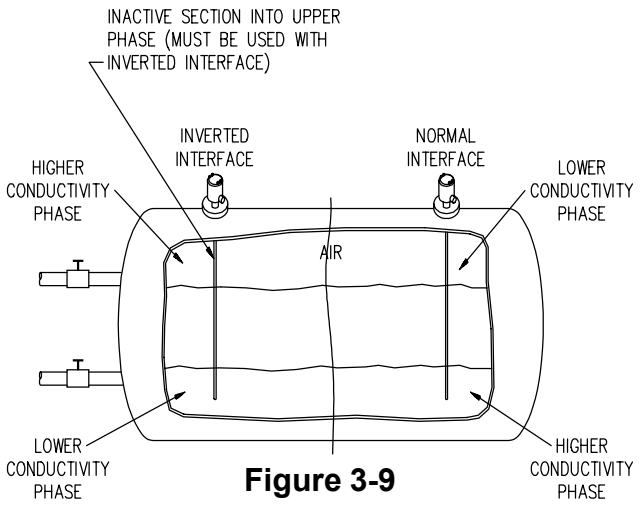

Figure 3-9
Interface Application

A. Normal Interface-Direct Acting (LLFS)

1) Set fail-safe link to "DIR" position (see Section 3.1.3) and set Fine Span to extreme counterclockwise position. Do not force. See Figure 3-7.

2) Set Step Span to Position #1.

3) Lower the interface level until the probe (or its lowest level) is covered with only the upper phase, insulating material. Set the Step and Fine Zero controls until the output is minimum (4 mA).

4) For this calibration procedure, a compensation capacitor may be required to obtain the minimum 4 mA output. It will be added by the factory when the application is known. If needed and not supplied, add - in 100 pF steps - an NPO capacitor across Terminals PAD and CW until the minimum output can be obtained. See Figure 3-10 or call factory service for value.

5) Raise the interface until most of the lower, waterlike phase of material is covering the probe (or its highest level). Output current will typically exceed full scale.

6) Turn the Step Span control clockwise until the output is less than full scale. (If current did not exceed full scale in Step 5, then leave Step Span in Position #1).

7) Turn the Fine Span control clockwise until the output is equal to the actual interface level on the probe.

Calibration is now complete.

B. Normal Interface - Reverse Acting (HLFS)

1) Set the fail-safe link to the "REV" position (see Section 3.1.3) and set the Fine Span control to the extreme counterclockwise position. See Figure 3-7.

2) Set the Step Span to Position #1.

3) Raise the level until the lower phase, conducting material is covering the probe (or its highest level). Adjust the Step and Fine Zero controls until the output is minimum (4 mA).

4) If 4 mA cannot be obtained, add a padding capacitor equal to or less than 1/4 the full scale capacitance of the probe in the upper phase. This capacitor will be added across Terminals PAD and CW by the factory when the application is known. See Figure 3-10.

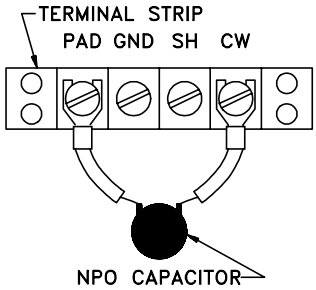

Figure 3-10
NPO Capacitor Connections

5) Lower the interface until only the upper phase, insulating material is covering the probe (or its lowest level). Output current will typically exceed full scale.

6) Turn the Step Span control clockwise until the output is less than full scale. (If current did not exceed full scale in Step 5, then leave Step Span in Position #1).

7) Turn the Fine Span control clockwise until the output reads the correct interface level.

Calibration is now complete.

C. Inverted Interface-Direct Acting(LLFS)

1) Move fail-safe link to "REV" position, not "DIR". See Section 3.1.3.

2) Set the Step Span control to Position #1 and Fine Span in the full counterclockwise position. See Figure 3-7.

3) Lower the level until the probe (or its lowest level) is covered with only the con ducting, upper phase material.

4) Set the Step and Fine Zero controls until output is minimum (4 mA).

5) If 4 mA cannot be obtained, add a padding capacitor equal to or less than 1/4 the full scale capacitance of the probe in the upper phase. This capacitor will be added across Terminals PAD and CW by the factory when the application is known. See Figure 3-10.

6) Raise the interface until most of the lower insulating phase of the material is covering the probe (or its highest level). Output current will typically exceed full scale current.

7) Turn the Step Span control clockwise until the output is less than full scale. (If output current did not exceed full scale in Step 6), then leave Step Span in Position #1).

8) Turn the Fine Span control clockwise until the output is equal to level of lower phase material covering the probe.

Calibration is now complete.

D. Inverted Interface-Reverse Acting (HLFS)

1) Set fail-safe link to Low-Level Fail-Safe position, not High Level. See Section 3.1.3.

2) Set the Step Span control to Position #1, and the Fine Span in the full counter clockwise position. See Figure 3-7.

3) Raise the interface to the desired upper level.

4) Adjust the Step and Fine Zero controls until the current output is minimum (4 mA).

5) If 4 mA cannot be obtained, add a padding capacitor equal to or less than 1/4 the full scale capacity of the probe in the lower phase. This capacitor will be added across Terminals Pad and CW by the factory when the application is known. See Figure 3-10.

6) Lower the interface to the desired lower level. Output current will typically exceed full scale.

7) Turn the Step Span control clockwise until the output is less than full scale. (If output current did not exceed full scale in Step 6), then leave Step Span in Position #1).

8) Turn the Fine Span control clockwise until the output is full scale (20 mA) or actual level.

Calibration is now complete.

3.4 Secondary Calibration Standard

In some applications, it is difficult or even impossible to completely fill or empty a vessel. In such a case, it is desirable to have a secondary calibration standard such as the Drexelbrook Model 401-6-8, which can be used to simulate the capacitance of an empty or full vessel. The following procedure permits recalibration of an instrument without the necessity of emptying the vessel. Figure 3-11 shows a typical calibration standard. Refer to the calibration standard manual (401-6-8) for proper connection and operation.

3.4.1 Recording Calibration Data

After initial calibration, do the following: (Also, see instruction manual for calibration standard.)

A. Disconnect the probe wire.

B. Connect the calibration standard to the instrument. See Figure 3-11.

C. Adjust the calibration standard until the instrument indicates minimum current (4mA).

D. Record the value read on the calibration standard and its serial number for later use.

E. Adjust the calibration standard until the instrument indicates maximum current (20 mA).

F. Record the capacitance value as in Step D.

G. Disconnect the calibration standard from the instrument terminals and reconnect the probe.

3.4.2 Recalibration

Whenever it is subsequently desired to check or reset the calibration, or replace the instrument, the calibration capacitor set to the value recorded above may be substituted for the probe. Proceed as follows:

A. Disconnect the probe wire.

B. Connect the calibration standard to the instrument. See Figure 3-11.

C. Set the calibration standard to the recorded values.

D. If necessary, adjust the zero control for the minimum current calibration and the span control for the maximum current calibration.

E. Disconnect the calibration standard and reconnect the probe wire to probe.

Unit is again ready for operation.

When replacing a malfunctioning electronic unit, the replacement chassis can be calibrated on the bench by the preceding method and then installed in the field.

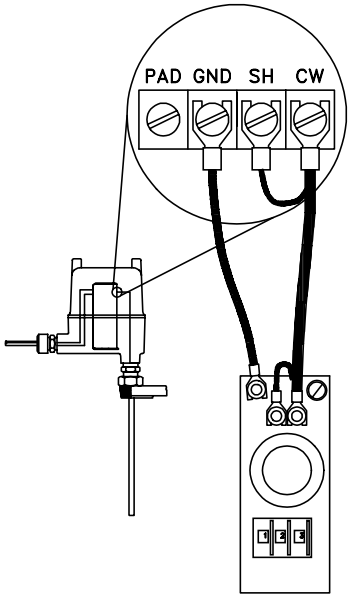

Figure 3-11
Calibration Standard

SECTION 5 - TROUBLESHOOTING

5.1 Introduction

The 408-8200 Series instruments are designed to give years of unattended service. No periodic or scheduled maintenance is required.

A spare chassis is recommended for every 10 units so that, in case of a failed unit, a critical application will not be held up while the unit is returned to the factory for repair.

If a difficulty occurs when operating your measurement system, mentally divide the system into its component parts and test each part individually for proper operation.

These troubleshooting procedures should be followed in checking out your system. If attempts to locate the difficulty fail, notify your local factory representative or call the factory direct and ask for the service department.

5.2 Testing the 408-8200 Series Electronic Unit

5.2.1 Operation Check

A. Remove the sensing element and signal wires from the transmitter.

B. Be sure Fail-Safe link is in low-level fail-safe position. See Figure 3-3.

C. With pencil, mark the positions of all controls on the faceplate in order to return to them.

D. Put the Step Span in Position #1 and the Fine Span in the full clockwise position. Put the Step Zero in Position #1 (most sensitive position). See Figure 3-1.

E. Observing polarities, connect a DC milliammeter and DC power supply (11.5 to 50 volts) in series, and complete the loop by connecting Terminals (-) and (+). See Figure 5-1.

F. Adjust the Fine Zero until the meter reads 0% (4 mA).

G. Turn the Fine Zero one clockwise turn further. The output should read approximately between 33% and 100% (9-20 mA).

If so, the instrument is probably working correctly. Each turn of the Fine Span changes the input a known amount. This checks the operation and gain of the transmitter.

H. If the difficulty has not been located at this point, proceed to the output checkout procedure in paragraph 5.3.

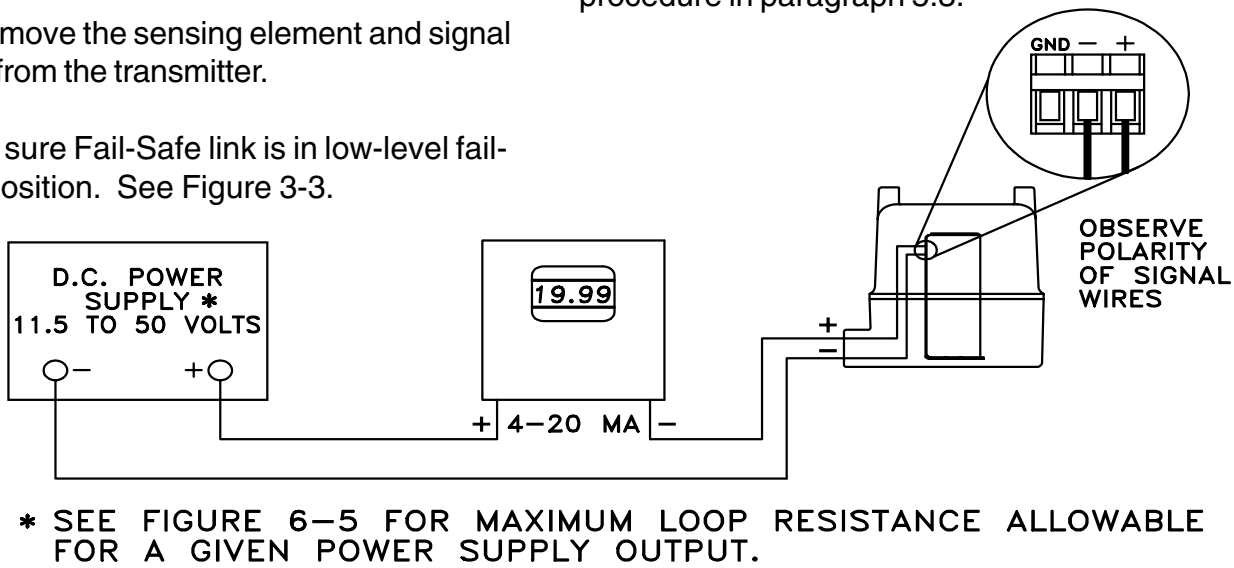

Figure 5-1
Power/Signal Wiring

5.2.2 Drift Check

If the output of a transmitter seems to be drifting, it is important to determine whether the drift is in the transmitter or in the probe. (A properly connected cable/probe never drifts.)

A. Remove the sensing element cable from the transmitter.

B. Without disturbing the dial settings, connect a capacitance standard or an NPO capacitor* across the probe to ground input. Adjust the capacitance standard or select a capacitor value that will bring the unit on scale (preferably around 50%).

*NPO capacitor remains stable with changes in temperature.

C. Record meter reading.

D. Observe the reading over a 24-hour period to see if it is stable.

E. If the reading is stable, the sensing element or the application must be the source of the drift. If the reading drifted, return the instrument for repair. Be sure to mark on the tag that the problem is drift. (List the capacitor size and mA deviation.)

F. Measure the resistance between the two wires that were just removed from (+) and (-) terminals of the electronic unit. Use the following table to determine if the resistance is too large.

$$R_{max\ \Omega} = \frac{V_{supply} - 11.5 \text{ volts}}{0.02 \text{ amps}}$$

Table 5-1
Minimum Allowable Resistance

V(SUPPLY) (VOLTS)	MAXIMUM LOOP RESISTANCE (OHMS)
50	1925
40	1425
30	925
24	625
20	425
18	325
12	25
11.5	0

5.3 Checking the Sensing Element

A. With an analog ohmmeter*, check the resistance of the probe-to-ground with level below the probe. See Figure 5-2.

*A digital ohmmeter may produce erroneous readings.

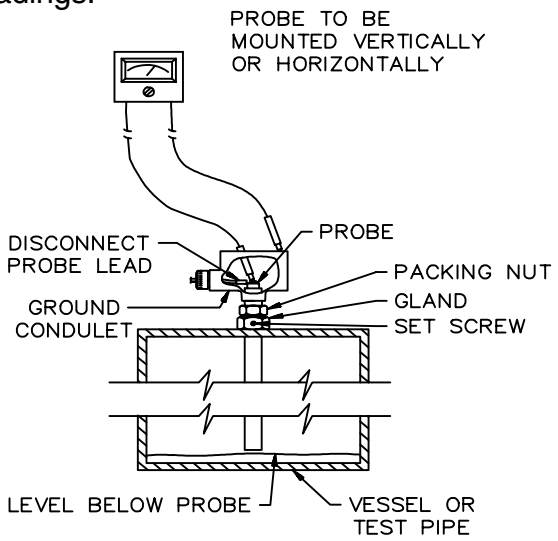

Figure 5-2
Testing the Sensing Element with Level Below the Probe

Resistance should be infinite. Resistance less than 1 megohm indicates leakage, probably due to product or condensation in the condulet, around the gland/packing nut area. Resistance of less than 100K ohms can cause errors in the reading. Consult factory service.

B. Check the resistance of the probe-to-ground with level above the probe. See Figure 5-3. Resistance readings less than 100K ohms indicate either defects in the probe insulation or, if a bare probe, that the material is conductive and an insulated probe may be required. (Consult factory.)

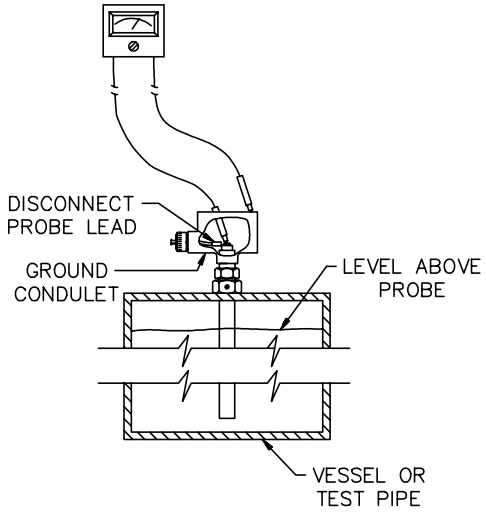

Figure 5-3
Testing the Sensing Element with Level Above the Probe

C. Coating error is characterized by high output with failing level, and a sharp drop to 0% when the material goes below the tip of the probe. To verify a coating problem, wipe the coating off the probe and recheck instrument operation. If the instrument reads correctly after cleaning, consult the factory for the best solution to the problem.

D. If a three-terminal sensing element is used, check resistance between center wire/shield and shield/ground. If readings are below 100K ohms, consult factory service.

5.4 Checking the Sensing Element Cable

Use Figure 5-4 10 check the cable.

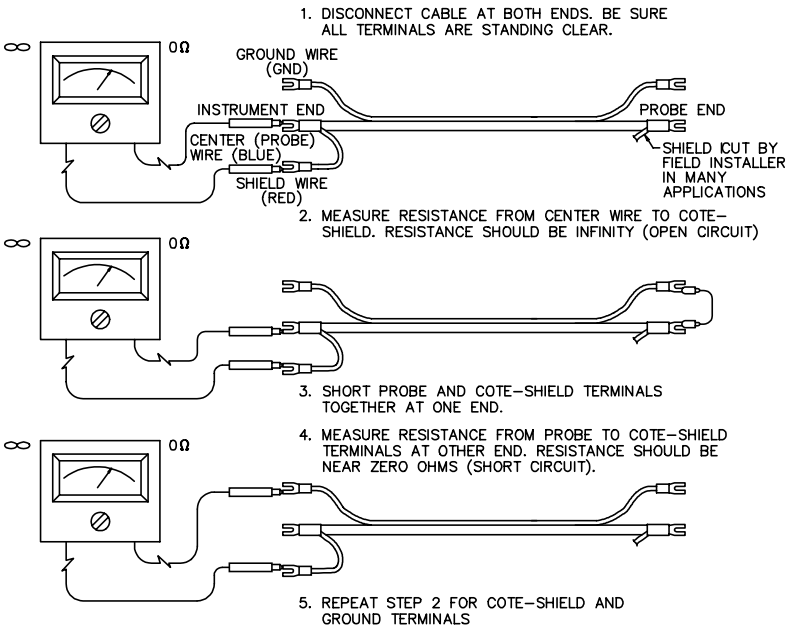

Figure 5-4
Testing the Cable

5.5 Checking the Two-Wire System Loop

A. See Figure 5-5. Disconnect the power from (+) and (-) terminals and measure the open circuit voltage from the power supply. Voltage should be equivalent to source voltage.

*SeeTable 5-1 for minimum allowable voltage.

B. Connect the signal wires to (+) and (-) terminals . Turn the Step Span and Step Zero to Position #1. Put Fine Span control completely clockwise and adjust the Fine Zero until 20 mA flows.

C. Measure the voltage between (+) and (-) terminals. Voltage should be between 11.5 and 50 VDC. If there is less than the minimum 11.5 volts required, the loop has too much resistance or not enough power supply voltage.

D. If, in Step C above, the voltage is less than 11.5 VDC, disconnect the power supply and signal wires to the unit. Short the wires that were removed from the power supply (+) and (-) terminals.

Note: If there are active devices in the loop, the resistance can be very high.

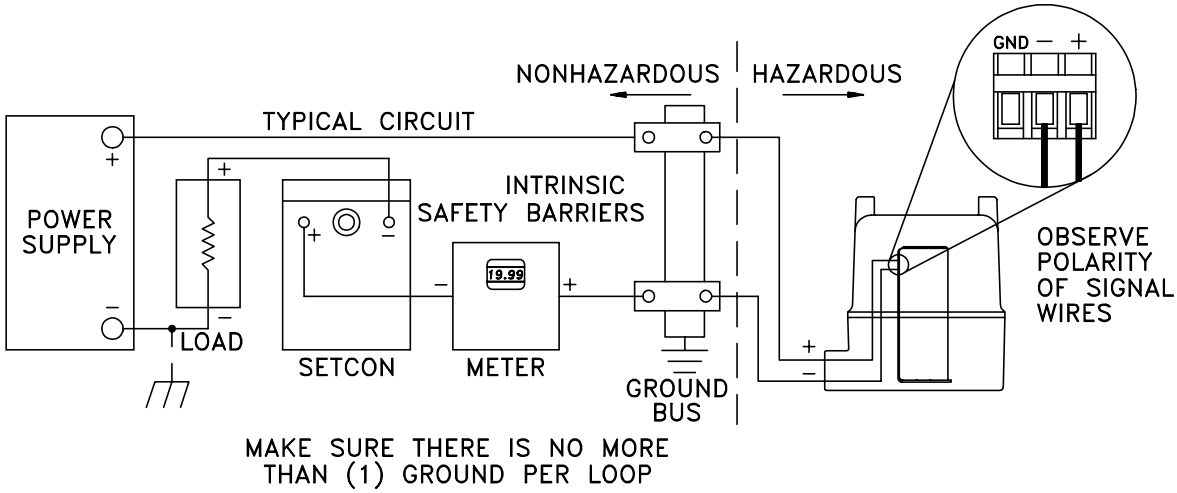

Figure 5-5
Loop Check

5.6 List of Some Possible Problems and Causes

Problem	Possible Cause	Checkout
1. Transmitter reads 20 mA or greater even when vessel is not full.	a. Transmitter malfunction b. Water in probe condulet c. Short in cable d. Cut in probe insulation e. Calibration is wrong	a. Sec. 5.2.1 b. Sec. 5.4 c. Sec. 5.4 d. Sec. 5.4 e. Sec. 3.3
2. Transmitter never reaches 20 mA even though the vessel is full, or the output reading is nonlinear at the upper end of the scale.	a. Load resistance too high b. Calibration is wrong c. Transmitter malfunction	a. Sec. 5.2.2 b. Sec. 3.3 c. Sec. 5.2.1
3. Transmitter is drifting.	a. Moisture in probe gland b. Water in probe condulet c. Transmitter malfunction d. Water in cable e. Cut in probe insulation f. Calibration is wrong g. Material properties are changing	a. Sec. 5.3 b. Sec. 5.4 c. Sec. 5.2.2 d. Sec. 5.4 e. Sec. 5.4 f. Sec. 3.3 g. Consult factory
4. Transmitter is erratic. Output reading jumps anywhere from 0% to 100%.	a. Radio frequency interference b. Cut in probe insulation c. Waves in the liquid	a. Need RFI filters. b. Sec. 5.4 c. Sec. 3.1.2
5. Transmitter was shipped precalibrated but is not reading correct level.	a. Wrong precalibration information supplied to factory b. Nozzle or pipe around probe is not specified on precalibration sheet c. Accuracy being checked by measuring outage as a % of full tank	a. Verify precal information b. Need to include info. on nozzle for precal c. Note: The zero point is at end of probe; not bottom of tank
6. Probe installed in stilling well, and readings are incorrect.	a. Probe touching stilling well b. Reading lower than actual level: Air trapped in stilling well c. Calibration is wrong d. Material in stilling well may be interfacing e. If plastic, may cause non-saturation of probe	a. Adjust mounting b. Put holes in stilling well to allow air to escape. c. Sec. 3.3 d. Consult factory e. Consult factory
7. As level increases, output reading decreases.	a. Fail-safe in HLFS position b. Transmitter malfunction	a. Sec. 3.1.3 b. Sec. 5.2.1
8. Transmitter reading 5% to 10% or greater in error.	a. Conductive buildup on probe b. Calibration is wrong	a. Sec. 5.4 Consult Factory b. Sec. 3.3
9. Erratic or incorrect readings.	a. Ungrounded conducting liquid in a fiberglass vessel	a. Instrument may need a ground. Consult factory.
10. Output current reading less than 3.5 mA	a. Wiring short from shield-to-ground, probably in probe head b. Probe not connected to transmitter	a. Sec. 2.5 b. See 3.5 or 3.6

5.7 Factory and Field Service Assistance

5.7.1 Telephone Assistance

If you are having difficulty with your Drexelbrook equipment, and attempts to locate the problem have failed, notify your local Drexelbrook representative, or call toll-free for the service department; 1-800-527-6297. The Fax number is 1-215-674-2731. Drexelbrook Engineering Company is located at 205 Keith Valley Road, Horsham, Pa. 19044. To help us solve your problem quickly, please have as much of the following information as possible when you call:

Instrument Model #408-8200 _____

Probe Model # _____

P.O. # _____
Date of P.O. _____

Cable Length _____
Application _____

Material being measured _____
_____

Temperature _____
Pressure _____
Agitation _____
Brief description of the problem _____
_____
_____
_____

Checkout procedures that failed _____
_____
_____

Do not return equipment without first con tacting the factory for a return authorization number. Any equipment being returned must include the following information:

Reason for return _____
_____

Return Authorization # _____
_____

Original P.O. # _____
Drexelbrook order # _____
_____

Your company contact _____
_____
_____

"Ship To" address _____
_____
_____

To keep the paperwork in order, please include a purchase order with returned equipment even though it may be coming back for warranty repair. You will not be charged if covered under warranty. Please return your equipment with freight charges prepaid. We regret that we cannot accept collect shipments.

Drexelbrook usually has a stock of reconditioned exchange units available for faster turnaround of a repair order. If you prefer your own unit repaired rather than exchanged, please mark clearly on the return unit, "DO NOT EXCHANGE".

Spare instruments are generally in factory stock. If the application is critical, a spare chassis should be kept on hand.

5.7.2 Field Service

Trained field service personnel are available on a time-plus-expense basis to assist in start-ups, diagnosing difficult application problems, or in-plant training of personnel.

Periodically, Drexelbrook instrument training seminars for customers are held at the factory. Contact the service department for further details on any of the above.

Section 6

WIRING AND CONTROL DRAWINGS
FOR
CENELEC-APPROVED TRANSMITTERS

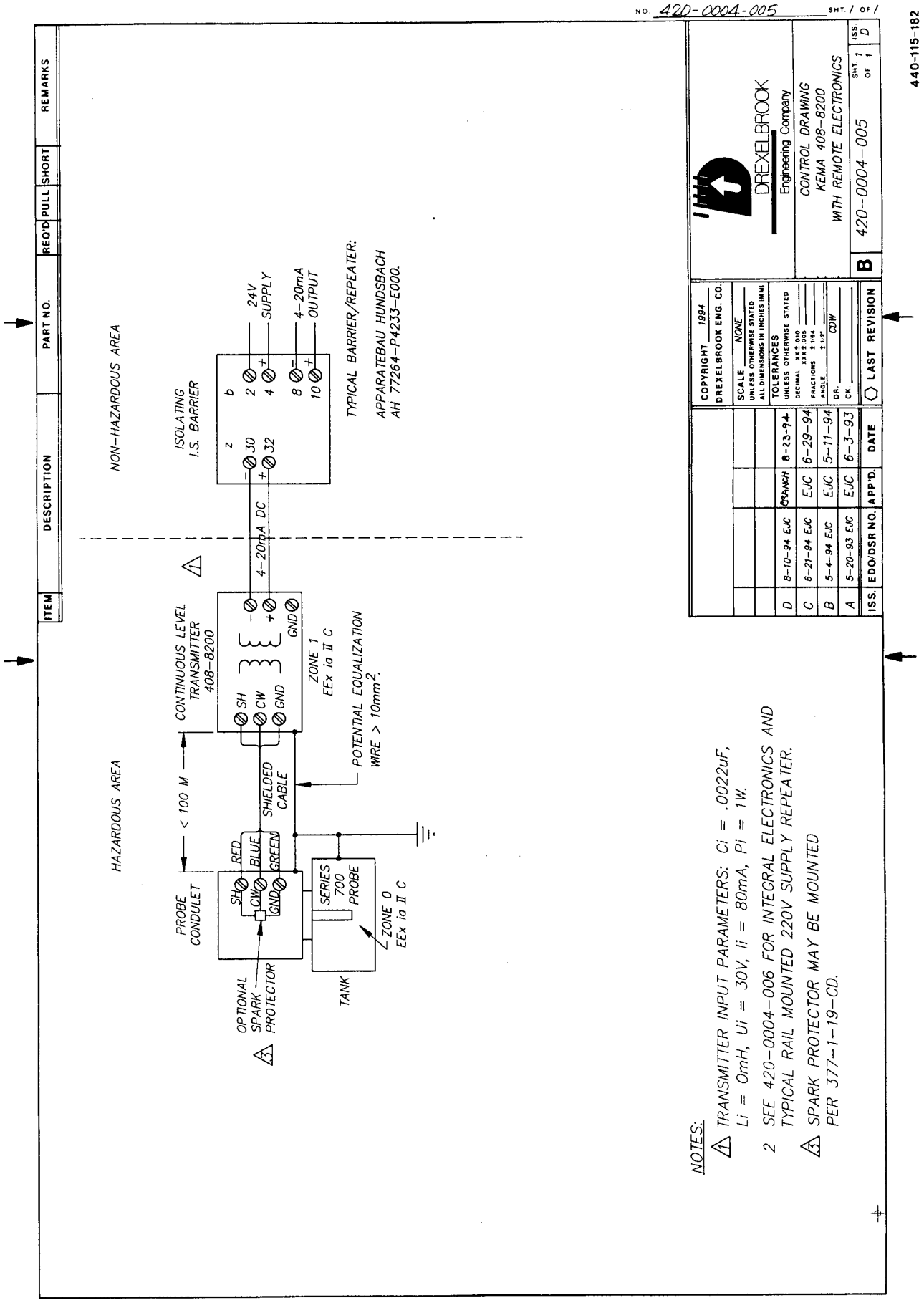
NO 420-0004-005 SHT. 1 OF 1
ITEM
DESCRIPTION
PART NO.
REQ'D
PULL
SHORT
REMARKS
NON-HAZARDOUS AREA
HAZARDOUS AREA
ISOLATING I.S. BARRIER
z
b
30
32
2
4
8
10
24V SUPPLY
4-20mA OUTPUT
TYPICAL BARRIER/REPEATER:
APPARATEBAU HUNDSBACH
AH 77264-P4233-E000.
4-20mA DC
CONTINUOUS LEVEL TRANSMITTER 408-8200
SH
CW
GND
GND
ZONE 1
EEx ia II C
POTENTIAL EQUALIZATION WIRE > 10mm².
< 100 M
SHIELDED CABLE
RED
BLUE
GREEN
PROBE CONDULET
SERIES 700 PROBE
ZONE 0
EEx ia II C
TANK
OPTIONAL SPARK PROTECTOR
NOTES:
1 TRANSMITTER INPUT PARAMETERS: Ci = .0022uF, Li = 0mH, Ui = 30V, Ii = 80mA, Pi = 1W.
2 SEE 420-0004-006 FOR INTEGRAL ELECTRONICS AND TYPICAL RAIL MOUNTED 220V SUPPLY REPEATER.
3 SPARK PROTECTOR MAY BE MOUNTED PER 377-1-19-CD.
ISS. EDO/DSR NO. APP'D. DATE
D 8-10-94 EJC CANCH 8-23-94
C 6-21-94 EJC EJC 6-29-94
B 5-4-94 EJC EJC 5-11-94
A 5-20-93 EJC EJC 6-3-93
LAST REVISION
COPYRIGHT 1994
DREXELBROOK ENG. CO.
SCALE NONE
UNLESS OTHERWISE STATED
ALL DIMENSIONS IN INCHES (MM)
TOLERANCES
UNLESS OTHERWISE STATED
DECIMAL .XX ± .010
.XXX ± .005
FRACTIONS ± 1/64
ANGLE ± 1/2°
DR. CDW
CK.
DREXELBROOK
Engineering Company
CONTROL DRAWING
KEMA 408-8200
WITH REMOTE ELECTRONICS
B 420-0004-005
SHT. 1 OF 1
ISS D
440-115-182

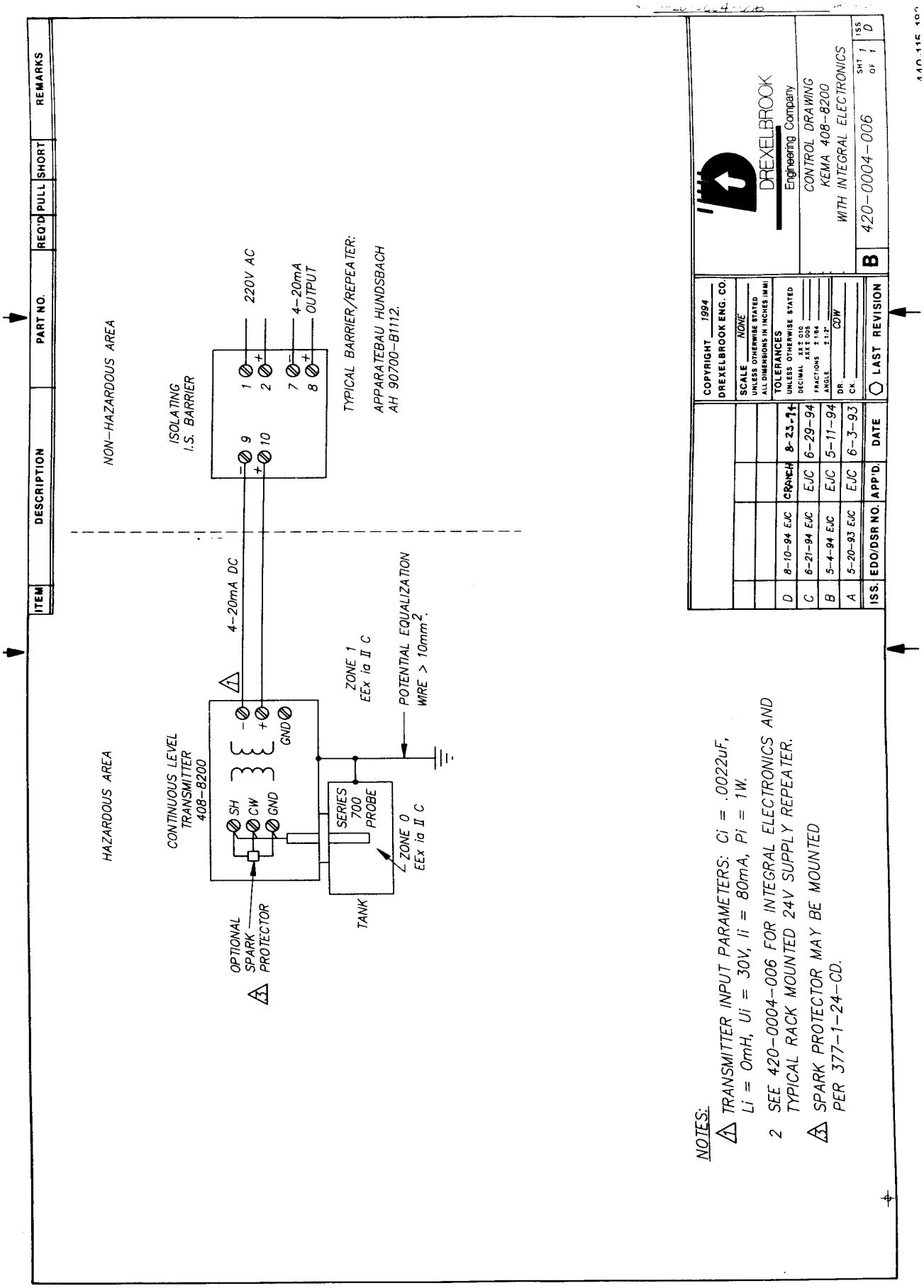
ITEM
DESCRIPTION
PART NO.
REQ'D
PULL
SHORT
REMARKS
NON-HAZARDOUS AREA
HAZARDOUS AREA
ISOLATING
I.S. BARRIER
220V AC
4-20mA
OUTPUT
TYPICAL BARRIER/REPEATER:
APPARATEBAU HUNDSBACH
AH 90700-B1112.
4-20mA DC
CONTINUOUS LEVEL
TRANSMITTER
408-8200
SH
CW
GND
GND
OPTIONAL
SPARK
PROTECTOR
SERIES
700
PROBE
TANK
ZONE 1
EEx ia II C
ZONE 0
EEx ia II C
POTENTIAL EQUALIZATION
WIRE > 10mm2.
NOTES:
TRANSMITTER INPUT PARAMETERS: Ci = .0022uF,
Li = OmH, Ui = 30V, Ii = 80mA, Pi = 1W.
2 SEE 420-0004-006 FOR INTEGRAL ELECTRONICS AND
TYPICAL RACK MOUNTED 24V SUPPLY REPEATER.
SPARK PROTECTOR MAY BE MOUNTED
PER 377-1-24-CD.
COPYRIGHT 1994
DREXELBROOK ENG. CO.
SCALE NONE
UNLESS OTHERWISE STATED
ALL DIMENSIONS IN INCHES (MM)
TOLERANCES
UNLESS OTHERWISE STATED
DECIMAL XX ± .010
XXX ± .005
FRACTIONS ± 1/64
ANGLE ± 1/2°
DR. CDW
CK.
D 8-10-94 EJC CRANCH 8-23-94
C 6-21-94 EJC EJC 6-29-94
B 5-4-94 EJC EJC 5-11-94
A 5-20-93 EJC EJC 6-3-93
ISS. EDO/DSR NO. APP'D. DATE
LAST REVISION
DREXELBROOK
Engineering Company
CONTROL DRAWING
KEMA 408-8200
WITH INTEGRAL ELECTRONICS
B
420-0004-006
SHT 1 OF 1
ISS D

AMETEK®
DREXELBROOK

An ISO 9001 Certified Company

205 Keith Valley Road Horsham, PA 19044

US Sales	1-800-553-9092
24 Hour Service	1-800-527-6297
International	+ 215-674-1234
Fax	+ 215-674-2731
E-mail	drexelbrook.info@ametek.com
Web	www.drexelbrook.com