Product Information ITM-51 | ITM-51R **FOOD**

ITM-51 Turbidity Sensor

CLEANadapt

Application / Specified Usage

- Turbidity measurement of liquid media for mid to high range (200...300,000 NTU equivalent)

Application Examples

- Phase separation of products (for example whey – cream – milk)
- CIP-return line (monitoring of pre-rinse water)
- Yeast harvest in breweries
- Quality control
- Leak detection of filter and gaskets
- Raw receiving bay

Hygienic Design / Process Connection

- Open, freely flushing design cleans easily and provides fast reaction to product changes.
- Product contacting (wetted) materials compliant to FDA
- Sensor made of stainless steel
- Optics made of high resistant sapphire
- Process connection G1/2" hygienic, Tri-Clamp (3A Compliant) or Varivent, adapters available for milk pipe (DIN 11851), DRD, APV et al. (see CLEANadapt product information)

Features / Advantages

- Front flush sensor or extended sensor stem (15mm)
- Immune from reflections caused by small diameter pipes or electro-polished surfaces
- No color dependency (wave length 860 nm)
- Smallest pipe diameter: DN25 (1")
- High reproducibility: ≤ 1% of full scale
- Switching output (switchpoint and hysteresis freely adjustable)
- Analog output 4...20 mA freely adjustable
- Two ranges externally switchable
- CIP-/SIP-cleaning up to 140 °C (284 °F) / maximum 120 minutes

Options / Accessories

- Electrical connection with M12 plug-in connector
- Molded Cordset for M12 plug-in connector
- Display module Simple User Interface (SUI) and Large User Interface (LUI)
- Remote version with cable length up to 30 m (98') (must be ordered separately)

Measuring Principle of the Relative Turbidity Meter

An infrared diode irradiates infrared light into the media. Particles in the media reflect the irradiated light which is detected by the receiver diode (backscatter principle). The electronics calculate the relative turbidity of the media according to the received signal.

The relative turbidity is based on the Negele calibration standard and is displayed in "%TU", "NTU" or "EBC".

Communication

IO-Link 4...20 mA

ITM-51

ITM-51R

Measurement Principle

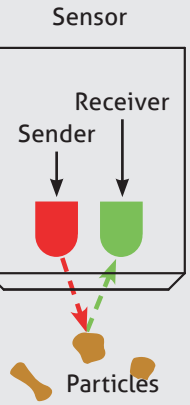

Specification			
Measurement category	Can be selected	%TU, NTU, EBC, %solids (customized)	
Measurement range	Freely adjustable	0...300,000 NTU equivalent 0...200 %TU 0...75,000 EBC	
Process connection		CLEANadapt G1/2" hygienic TriClamp 1.5", 2", 2.5", 3" Varivent DN 25 (type F) DN 40/50 (type N)	
Process pressure		-1...20 bar (-14.5 psi...290 psi)	
Tightening torque		20 Nm (CLEANadapt system)	
Materials	Connecting head Sensor Lens Plastic cover/sight glass	Stainless steel 1.4308 Stainless steel 1.4404 (316L) Sapphire Polycarbonate	
Temperature ranges	Ambient Process CIP/SIP	-10...60 °C (14...140 °F) -10...130 °C (14...266 °F) Up to 140 °C (284 °F) max. 120 min	
Reproducibility	Of turbidity	< 1% of upper range limit	
Resolution/measurement range	The resolution is dependent on the selected measurement range	range/NTU	resolution/NTU
		< 1000	15
		1000...10000	30
		10000...100000	100
Accuracy	0...9,999 NTU 10,000...300,000 NTU	±3% from measurement value; ±50 NTU offset ±5% from measurement value	
Long-term stability	±0.2%	from measurement value	
Response time	For turbidity measurement	0.75 s	
Damping	1.5 s, 3 s, 5 s, 10 s, 20 s	adjustable damping	
Measurement principle	Infrared backscatter	wave length 860 nm	
Electrical connection	Cable gland Cable connection Supply voltage Protection class	2 x M16 x 1.5 2 x M12 connector 1.4305 18...36 V DC max. 190 mA IP69K	
Communication	Analog Digital	2x Analog output 4...20 mA, potential-free 1x Digital Input (24 V DC), short circuit proof IO-Link v1.1	
Weight		750 g (1.65 lb)	

Mechanical Connection / Installation

- The sensor has to be installed so that the lens is entirely surrounded by media and no bubbles can occur.
- Installation in a rising pipe is recommended.
- If weld-in sleeve is correctly mounted, the connector will point in the media flow direction
- For installation in horizontal pipes from the top: We recommend using an extended sensor stem (15mm) to avoid bubbles influencing the measuring signal
- The maximum tightening torque for mounting is 20 Nm

Conditions for a measuring point according to 3-A Sanitary Standard 46-03

- The ITM-51 / ITM-51R sensors with process connection TCx and TLx conform to the 3-A Sanitary Standard
- Sensors are designed for CIP-/SIP cleaning. Maximum 140 °C (284 °F) / 120 min
- The mounting position and self-draining properties must be in accordance with the current 3-A Sanitary Standard

ITM-51 with vertical head orientation

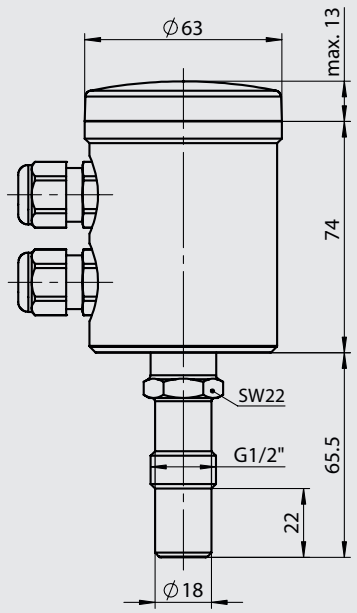

ITM-51-SOL-V-D-P

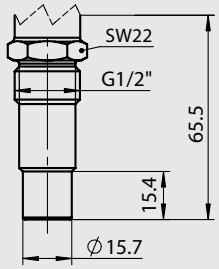

ITM-51-TCx-V-D-P

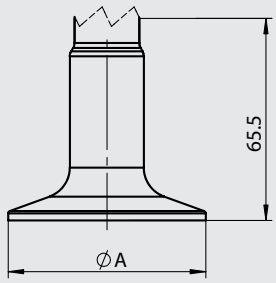

ITM-51-TLx-V-D-P

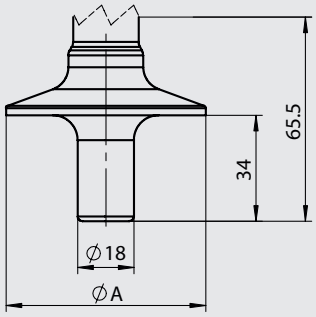

ITM-51-Vxx-V-D-P

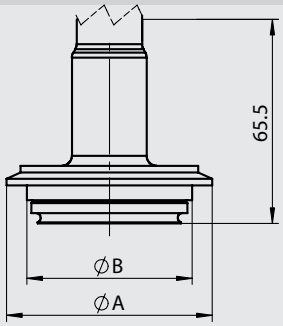

ITM-51 with horizontal head orientation

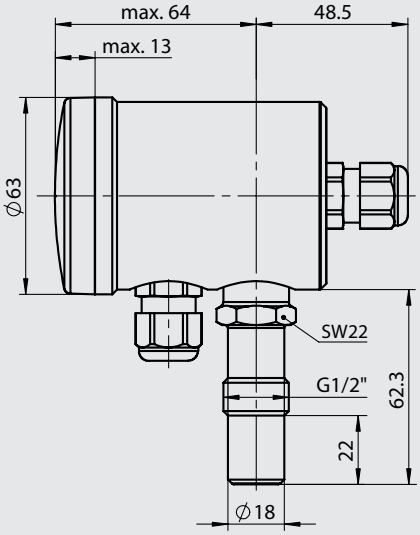

ITM-51-SOL-H-D-P

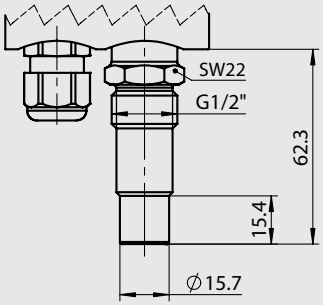

ITM-51-TCx-H-D-P

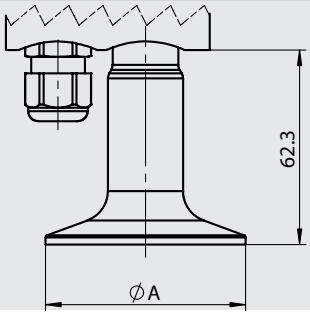

ITM-51-Vxx-H-D-P

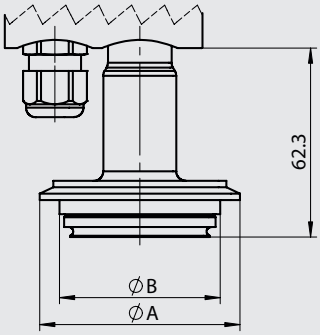

ITM-51-TLx-H-D-P

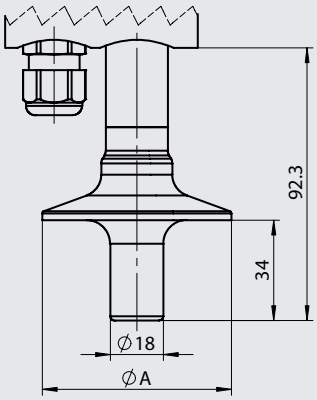

Varivent size		
Type	**Ø A**	**Ø B**
V25	66.0 mm	57.0 mm
T40	84.0 mm	75.0 mm

Tri-Clamp size	
Type	**Ø A**
TC1/TL1	50.5 mm
TC2/TL2	64.0 mm
T25/TL5	77.5 mm
TC3/TL3	91.0 mm

HUR / Head Unit Remote Version

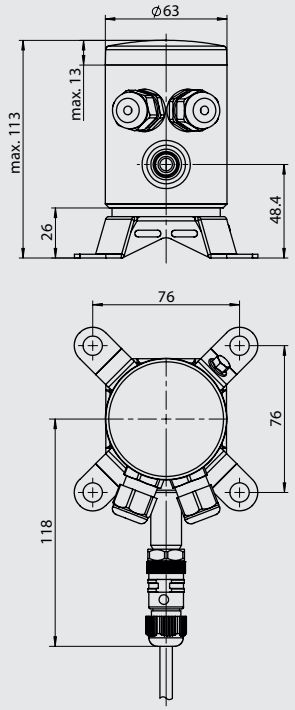

ITM-51R-SO1-D-P

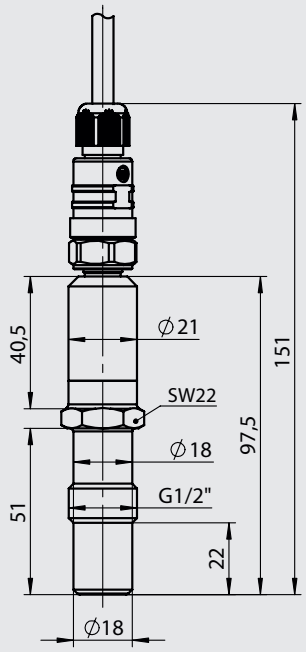

ITM-51R-SOL-D-P

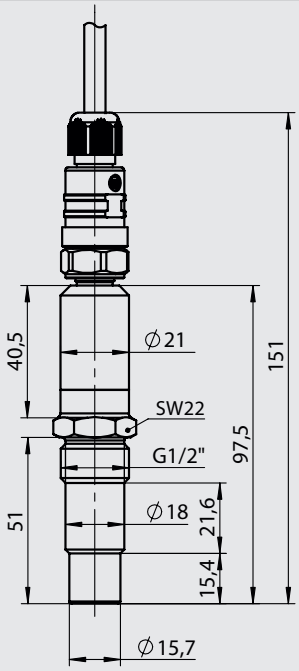

ITM-51R-Vxx-D-P

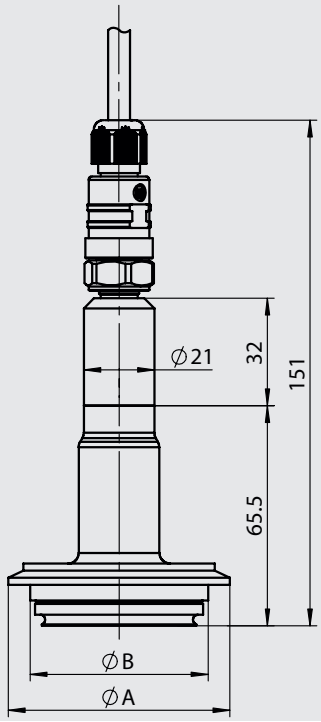

ITM-51R-TCx-D-P

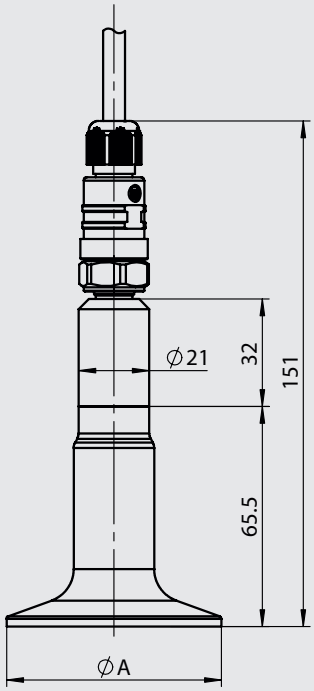

ITM-51R-TLx-D-P

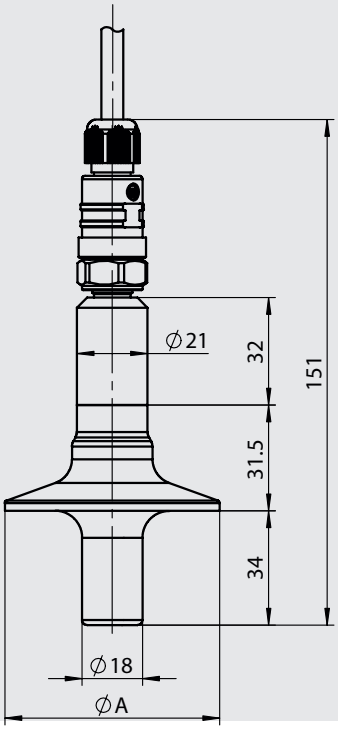

Disposal

- This instrument is not subject to the WEEE directive 2002/96/EG and the respective national laws.
- Take the device directly to a specialized recycling company and do not use municipal collecting points.

Reshipment

- Sensors shall be clean and must not be contaminated with dangerous media. Please note the cleaning information provided.
- Use suitable transport packaging only to avoid damage to the equipment.

Adjustment

- The device factory setting is X45A - Turb1 Range (0...100 % = 4...20 mA).
- With an external control voltage (24 V DC) X45B - Turb 2 Range can be selected (E1 = 24 V DC). (See "Electrical Connection")

Switching the Measurement Range (External Range Switching)

- The digital control input E1 is galvanically isolated from the power supply. Ground: clamp 9 (0 V)

E1*	Measurement Range
0	1 (factory setting: 0...100 %)
1	2 (factory setting: 0...10 %)

* 0 = 0 V DC / 1 = 24 V DC

In- and Output Length

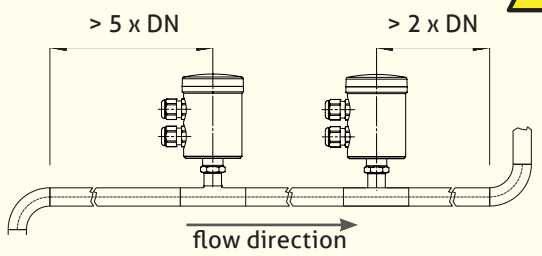

Note

Select a suitable measurement range for applications with high turbidity variances (e.g. milk / milk water mixture) to achieve a precise measurement

Calibration

Device is calibrated at the factory and a periodic calibration is not neccessary. A calibration check can be performed on site by using the calibration check tool. For a detailed description please refer to the manual.

Showcase Diagram of different Media

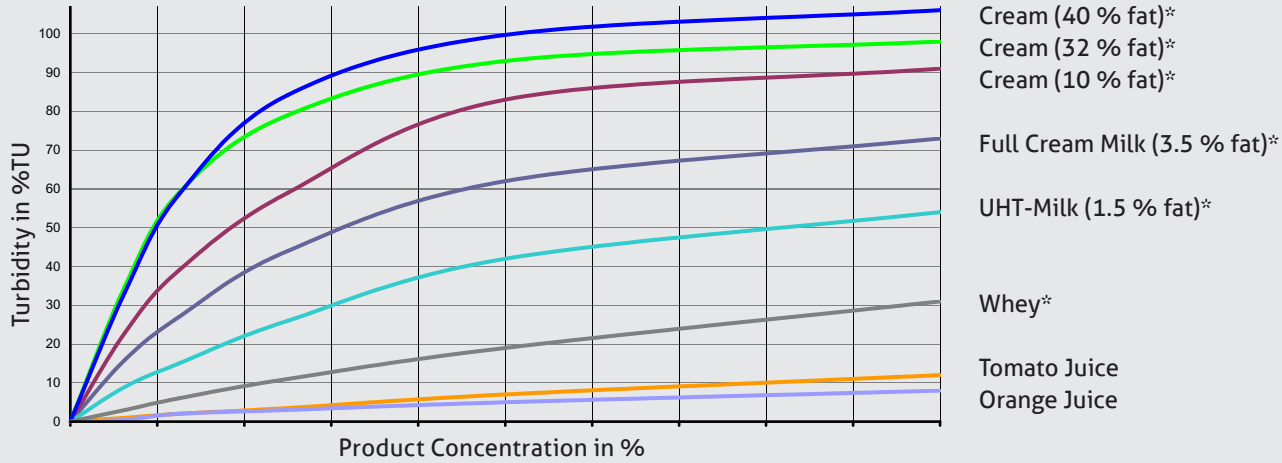

* Average turbidity of customary milk products at different dilutions.

Turbidity Diagram

Depending on particle form and size, the slope of the characteristic curve decreases while turbidity increases. This is primarily caused by dampening / absorption effects due to multiple reflections inside the media. The turbidity measured in the production process can deviate from the graphs shown above, depending on product, process step and production process.

Cleaning / Maintenance

- Don't use sharp items or aggressive detergents for cleaning the optics.
- When using pressure washers, don't point the nozzle directly at the electrical connections

Conventional Usage

- Not suitable for applications in explosive areas
- Not suitable for applications in security-relevant equipment (SIL)

Electrical Connection ITM-51 | ITM-51R

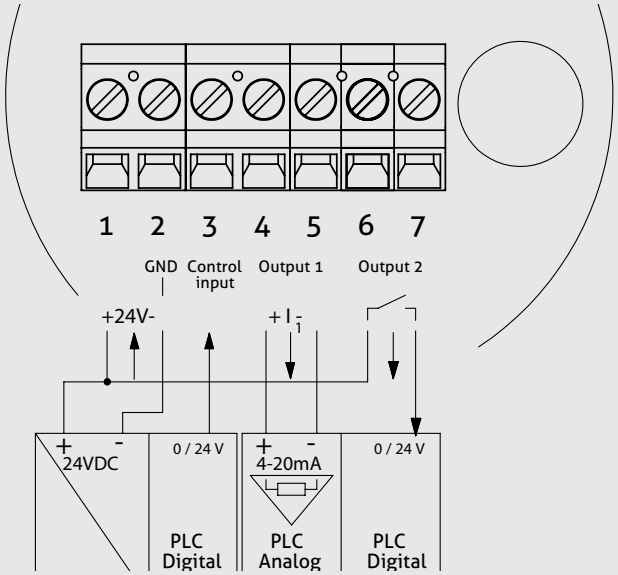

1: Power supply +24 V DC
2: Power supply -
3: Digital input X3
4: Analog output X45 +
5: Analog output X45 -
6: Digital output X67
7: Digital output X67

Sensor Configuration

Monitoring or configuring the sensor can be performed using IO-Link or the MPI-200 programmer with MPI-200-F adapter. It must be ensured that the sensor is completely connected to the supply voltage (24VDC) while the parameters are being set.

Programming adapter MPI-200-F connection

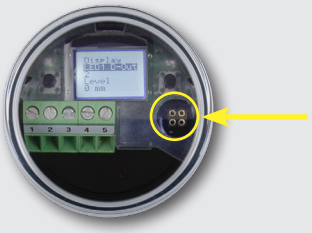

Connection plug for MPI-200-F adapter as an intermediate plug between the ITM-51 electronics and the MPI-200 connection 3 (see next figure).

Connection for MPI-200 programmer

1: Connection for M12 connector
2: USB port for connecting to a PC
3: Connection cable to adapter for ITM-51
4: MPI-200-F

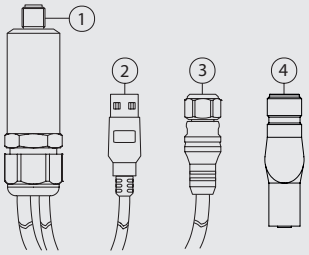

Electrical connection "N" (I52/I53 Analog Only Signal Module)

M12 connector top (4 pin)

1: Out 1 +
2: Out - / D out
3: Out + / D out
4: Out 1

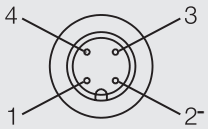

M12 connector bottom (5 pin)

1: Power supply +24 V DC
2: Not assigned
3: Not assigned
4: Power supply -
5: Digital input (na at A52)

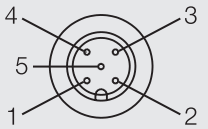

Electrical connection "A" (I52/I53 Analog Only Signal Module)

M12 connector top (4 pin)

1: Out +
2: Out -
3: Power supply +24 V DC
4: Power supply

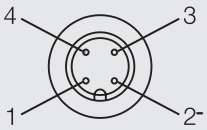

M12 connector bottom (5 pin)

1: Out - / D out
2: Not assigned
3: Not assigned
4: Out + / D out
5: Digital input (n/a for I52)

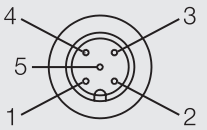

Electrical connection "M" (A42 Analog Only Signal Module)

M12 connector top (4 pin)

1: Power supply +24 V DC
2: Out +
3: Out -
4: Power supply -

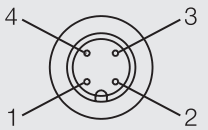

Electrical connection "R" (I52/I53 IO-Link and Analog Signal Module)

M12 connector (4-pin)

1: Analog output X45 +
2: Relay output X67
3: Relay output X67
4: Analog output X45 -

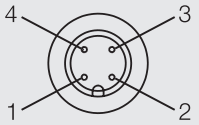

M12 connector (3-pin)

1: Power supply +24 V DC
3: Power supply -
4: IO-Link / Digital input X3

IO-Link

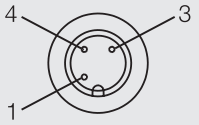

Order code

ITM-51R (turbidity sensor, remote version, remote cable must be ordered seperately)

Process connection (Ⓐ: 3-A approval)

S0L	CLEANadapt G1/2", extended sensor stem
S01	CLEANadapt G1/2"
TC1	Tri-Clamp 1½" Ⓐ
TC2	Tri-Clamp 2" Ⓐ
T25	Tri-Clamp 2½" Ⓐ
TC3	Tri-Clamp 3" Ⓐ
TL1	Tri-Clamp 1½", extended sensor stem Ⓐ
TL2	Tri-Clamp 2", extended sensor stem Ⓐ
TL5	Tri-Clamp 2½", extended sensor stem Ⓐ
TL3	Tri-Clamp 3", extended sensor stem Ⓐ
V25	Varivent type F, DN 25
V40	Varivent type N, DN 40/50

Signal Module

A42	1 x 4...20 mA turbidity only, display prepared
I52	IO-Link and1 x 4...20 mA turbidity, 1 x switching out, no external range switching, display prepared
I53	IO Link and 1 x 4...20 mA turbidity, 1 x switching out, external range switching, display prepared

Electrical connection

P*	1x Cable gland M16x1.5 for A42 Analog Output
D*	2x Cable gland M16x1.5 for I52 or I53 Analog Output
M	1x M12 connector, 4-pin for output A42
N	2x M12 connector, 4-pin for output/input, 5-pin for power supply (I52/I53) analog output
A	2x M12 connector, 4-pin for power supply, 5-pin for output/input (I52/I53) analog output
R	2x M12 connector, 4-pin for analog output, 3-pin for IO-Link and input (I52/I53)

Interface/Display

X	Without Interface
L	Large User Interface with display

Enclosure

X	Opaque plastic cap
P	Clear plastic cap
M	Stainless steel without window
W	Stainless steel with window

Parameter configuration

X	Standard

ITM-51R / S01 / I53 / N / L / P / X

*Electrical connections P & D may not be watertight. Sensors returned for water damage may not be covered under warranty.

Connection cable for ITM-51R (remote version: ssmust be ordered separately)

M12-PVC/8-5 m	PVC-cable M12 coupling both-sided, 8-pin, IP69K, 5 m
M12-PVC/8-10 m	PVC-cable M12 coupling both-sided, 8-pin, IP69K, 10 m
M12-PVC/8-25 m	PVC-cable M12 coupling both-sided, 8-pin, IP69K, 25 m
M12-PVC/8-xx m	PVC-cable M12 coupling both-sided, 8-pin, IP69K, special length

PVC-cable with M12-connection

Information

- The components ITM-51S/sensor and HUR/Head Unit Remote can be purchased as spare parts separately.
- The valid configuration can be seen on the product labels

Order code

ITM-51 (turbidity sensor)

Process connection (Ⓐ: 3-A approval)

S0L	CLEANadapt G1/2", extended sensor stem
S01	CLEANadapt G1/2"
TC1	Tri-Clamp 1½" Ⓐ
TC2	Tri-Clamp 2" Ⓐ
T25	Tri-Clamp 2½" Ⓐ
TC3	Tri-Clamp 3" Ⓐ
TL1	Tri-Clamp 1½", extended sensor stem Ⓐ
TL2	Tri-Clamp 2", extended sensor stem Ⓐ
TL5	Tri-Clamp 2½", extended sensor stem Ⓐ
TL3	Tri-Clamp 3", extended sensor stem Ⓐ
V25	Varivent type F, DN 25
V40	Varivent type N, DN 40/50

Enclosure Orientation

H	horizontal
V	vertical

Output

A42	1 x 4...20 mA turbidity only, display prepared
I52	IO-Link and1 x 4...20 mA turbidity, 1 x switching out, no external range switching, display prepared
I53	IO Link and 1 x 4...20 mA turbidity, 1 x switching out, external range switching, display prepared

Electrical connection

P*	1x Cable gland M16x1.5 for A42 Analog Output
D*	2x Cable gland M16x1.5 for I52 or I53 Analog Output
M	1x M12 connector, 4-pin for output A42
N	2x M12 connector, 4-pin for output/input, 5-pin for power supply (I52/I53)
A	2x M12 connector, 4-pin for power supply, 5-pin for output/input (I52/I53)
R	2x M12 connector, 4-pin for analog output, 3-pin for IO-Link and input (I52/I53))

Interface/Display

X	without Interface
S	Simple User Interface with small display
L	Large User Interface with display

Enclosure

X	opaque plastic cap
P	clear plastic cap
M	stainless steel without window
W	stainless steel with window

Parameter configuration

X	standard

ITM-51 S01 / V / I53 / D / L / P / X

Transport / Storage

- No outdoor storage
- Store in a dry and dust free area
- Do not expose to corrosive media
- Protect against solar radiation
- Avoid mechanical shock and vibration
- Storage temperature -4...140 °F (-20...+60 °C)
- Relative humidity max. 80 %

Notice on conformity

Applicable directives:
- Electromagnetic Compatibility Directive 2014/30/EC
- The CE label confirms compliance of this product with the applicable EC directives.
- You are required to comply with all applicable guidelines for the entire equipment.

50098 / 1.3 / 2019-10-09 / KS / NA

Anderson-Negele
156 Auriesville Road
Fultonville, NY 12072

Phone 800-833-0081
Fax 518-922-8997
info@anderson-negele.com

Tech. Support:
techservice@anderson-negele.com
Phone 800-833-0081