Honeywell

ST 800/ST 700 SmartLine Pressure Transmitter
Quick Start Installation Guide

34-ST-25-36, Revision 9, October 2019

This document provides descriptions and procedures for the Quick Installation of Honeywell's family of SmartLine Pressure Transmitters.

The SmartLine Pressure Transmitter is available in a variety of models for measuring Differential Pressure (DP), Gauge Pressure (GP), and Absolute Pressure (AP). For full details refer to the manuals listed below for protocols, human interface (HMI), Operation, Installation, Configuration, Calibration, Maintenance, Parts, Safety and Approvals etc. including options.

Documentation

To access complete documentation, including language variants, scan the QR code below using your smart phone/device or QR code scanner.

Go to the APP store for your free Smartphone QR scanner

Or you can follow the URL to access the online SmartLine HUB page.

The HUB page will contain direct links to open SmartLine product documentation.

URL
https://hwll.co/SmartLineHUB

QR Code

Table of Contents

Tables

Figures

Installation

Evaluate the site selected for the Transmitter installation with respect to the process system design specifications and Honeywell's published performance characteristics for your particular model.
Temperature extremes can affect display quality. The display can become unreadable at temperature extremes; however, this is only a temporary condition. The display will again be readable when temperatures return to within operable limits.

Mounting the Transmitter

Transmitter models, except flush mounts and those with integral flanges, can be attached to a two-inch (50 millimeter) vertical or horizontal pipe using Honeywell's optional angle or flat mounting bracket; alternately you can use your own bracket. Flush-mount models are attached directly to a process pipe or tank by a one-inch weld nipple. Models with integral flanges are supported by the flange connection.
Typical Bracket mounted and Flange Mounted Installations

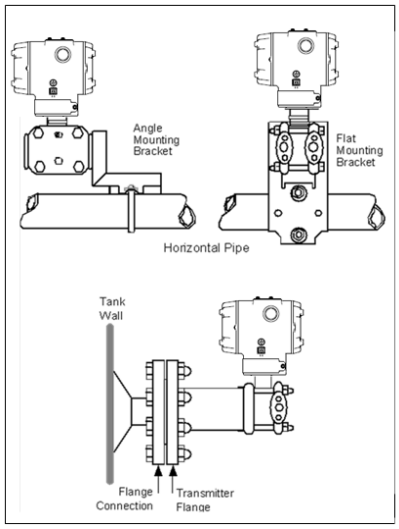

Figure 1:Mounting Brackets

Bracket Mounting

- Optional mounting bracket, see Figure 2
- Existing mounting bracket, see Figure 3
- Rotate the transmitter housing, see Figure 4

Level a transmitter with small absolute or differential pressure spans, see Figure 5

Optional Mounting Bracket

Position the bracket on a 2-inch (50.8mm) and install "U" bolt around pipe and through holes in bracket. Secure with nuts and lock washers provided.

Figure 2 Example - Angle mounting bracket secured to horizontal or vertical pipe.

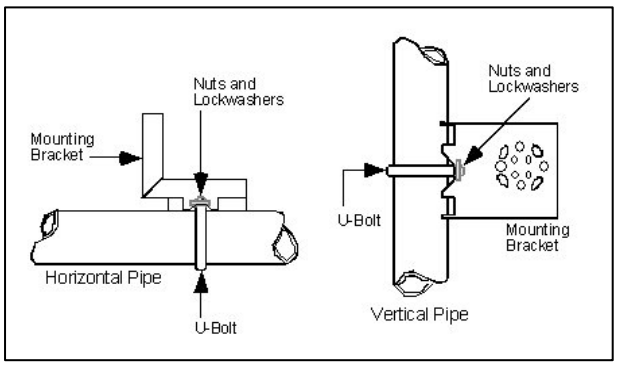

Figure 2: Angle Mounting Bracket

Existing Mounting Bracket

Align appropriate mounting holes in transmitter with holes in bracket and secure with bolts and washers provided.

Note: If the meter body is hexagonal, you must use the additional bracket supplied. If meter body is round, discard the bracket.

Example – LGP model transmitter mounted to optional angle mounting bracket.

If Transmitter is….	Then….
DP, Dual Head GP, Dual Head AP and DP Remote Seals.	Use alternate mounting holes in end of heads.
In-line GP and AP (LGP model) or GP/AP Remote Seal	Use smaller "U" bolt provided to attach meter body to bracket. See **Figure 3**.

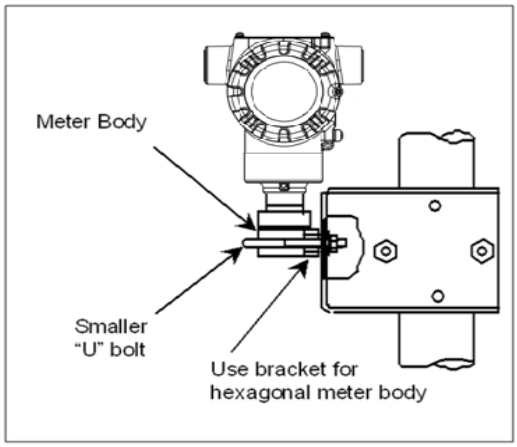

Figure 3: LGP and LAP models

Rotating Transmitter Housing

Loosen set screw on outside neck of transmitter one full turn. Rotate Transmitter housing in maximum of 180 degree increment in left or right direction from center to position you require and tighten set screw (1.46 to 1.68Nm/13 to 15lb-in).

Figure 4 Example – Rotating Transmitter Housing.

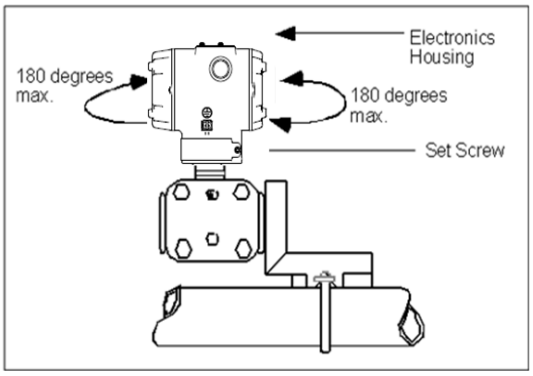

Figure 4: Rotating Transmitter Housing

Leveling Transmitters with Small Absolute or Differential Pressure Spans

Mounting position of these transmitters is critical due to the smaller transmitter spans.

To minimize these positional effects on calibration (zero shift), take the appropriate mounting precautions that follow for the given transmitter model.

See **Figure 5** for suggestions on how to level the transmitter using a spirit balance.

To perform a **Zero Trim** after leveling, refer to **Trim the Transmitter** on **page 4.**

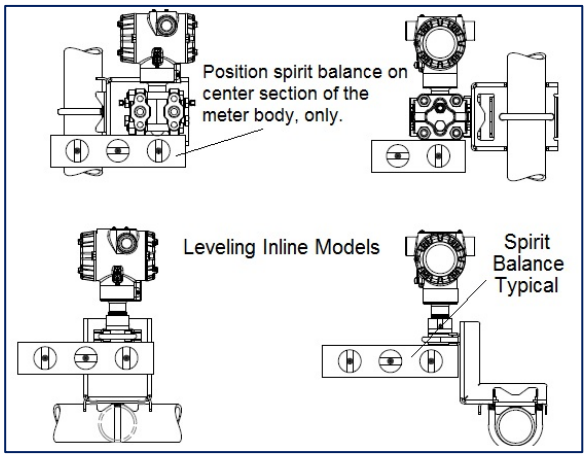

Figure 5: Using level to mount transmitter

For model STA840, STA822, STA740 or STA722 transmitters, you must ensure that the transmitter is vertical when mounting it. You do this by leveling the transmitter side-to-side and front-to-back.

Mount transmitter vertically to assure best accuracy. Position the spirit balance on the pressure connection surface of AP body.

Flange Mounting

To mount a flange mounted transmitter model, bolt the transmitter's flange to the flange pipe on the wall of the tank.

On insulated tanks, remove enough insulation to accommodate the flange extension. It is the End User's responsibility to provide a flange gasket and mounting hardware that are suitable for the transmitter's service condition.

To prevent degradation of performance in Flush-Mounted Flanged Transmitters, exercise care to ensure that the internal diameter of the flange gasket does not obstruct the sensing diaphragm.

To prevent degradation of performance in Extended Mount Flanged Transmitters, ensure that there is sufficient clearance in front of the sensing diaphragm body.

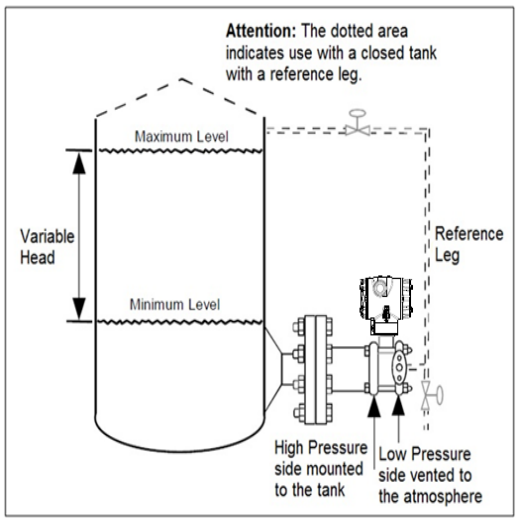

Figure 6: Flange mounting

Flush Mounting

To mount a flush mounted transmitter model, cut a hole for a 1-inch standard pipe in the tank or pipe where the transmitter is to be mounted. See **Figure 7.**

Weld the 1-inch mounting sleeve to the wall of the tank or to the hole cut on the pipe. Insert the meter body of the transmitter into the mounting sleeve and secure with the locking bolt. Tighten the bolt to a torque of 6.4Nm ±0.30Nm [4.7ft.-lbs. ±0.2ft.-lbs.]

Once the transmitter is mounted, the transmitter housing can be rotated to the desired position. See **Figure 7.**

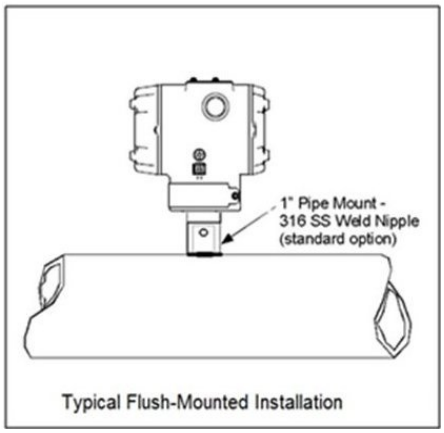

Figure 7: Flush Mounting

Remote Seal Mounting

Mount the transmitter at a remote distance determined by length of capillary tubing.

Note: The combination of tank vacuum and high pressure capillary head effect should not exceed 9psi (300mm Hg) absolute.

On insulated tanks, remove enough insulation to accommodate the mounting sleeve.

Figure 8 Example – Typical Remote Seal Transmitter installation.

Note: For Sanitary 3-A installations, only mount the transmitter outside of the Non-Product Contact area where incidental contact with the process material is unlikely, use a minimum capillary length of 1.5m (5ft.)

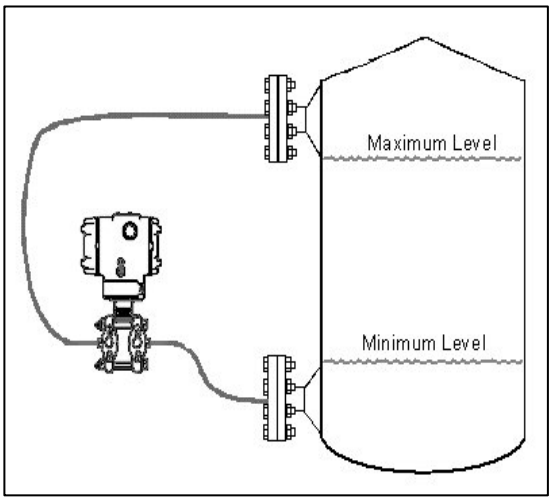

Figure 8: Remote Seal mounting

Conduit Entry Plugs and Adapters

Procedures

It is the User/Installer's responsibility to install the Transmitters in accordance with national and local code requirements. Conduit entry plugs and adapters shall be suitable for the environment, shall be certified for the hazardous location when required and acceptable to the authority having jurisdiction for the plant.

CONDUIT ENTRY PRECAUTIONARY NOTICE

THE CONDUIT/CABLE GLAND ENTRIES OF THIS PRODUCT ARE SUPPLIED WITH PLASTIC DUST CAPS WHICH ARE NOT TO BE USED IN SERVICE. IT IS THE USER'S RESPONSIBILITY TO REPLACE THE DUST CAPS WITH CABLE GLANDS, ADAPTORS AND/OR BLANKING PLUGS WHICH ARE SUITABLE FOR THE ENVIRONMENT INTO WHICH THIS PRODUCT WILL BE INSTALLED. THIS INCLUDES ENSURING COMPLIANCE WITH HAZARDOUS LOCATION REQUIREMENTS AND REQUIREMENTS OF OTHER GOVERNING AUTHORITIES AS APPLICABLE.

Use the following procedures for installation:

Table 1 - Conduit Entry Plugs

Step	Action			
1	Remove the protective plastic cap from the threaded conduit entry.			
2	To ensure the environmental ingress protection rating on tapered threads (NPT), a non-hardening thread sealant may be used.			
3	Thread the appropriate size conduit plug (M20 or ½" NPT) into the conduit entry opening. Do not install conduit entry plugs in conduit entry openings if adapters or reducers will be used.			
4	Tighten adapters according to the following table.			
	Description	Tool	Torque	
	M20 Conduit Entry	10mm Hex Wrench	32Nm	24Lb-ft
	½" NPT Conduit Entry	10mm Hex Wrench	32Nm	24Lb-ft

Table 2 - Conduit Adapters

Step	Action			
1	Remove the protective plastic cap from the threaded conduit entry.			
2	To ensure the environmental ingress rating on tapered threads (NPT), a non-hardening thread sealant may be used.			
3	Thread the appropriate size adapter (M20 or ½ NPT) into the conduit entry opening			
4	Tighten adapters according to the following table.			
	Description	Tool	Torque	
	½ to ¾ NPT Adapter	1 ¼" Wrench	32Nm	24Lb-ft

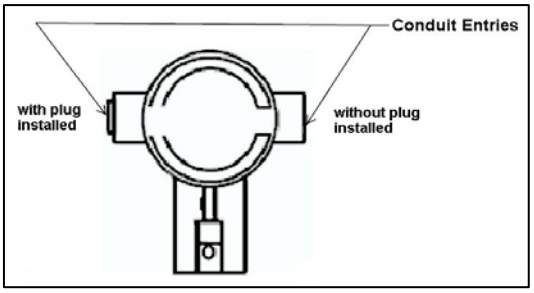

Figure 9: Electronic Housing Conduit Entries

Note. No plugs come installed in the housings. All housings come with temporary plastic dust protectors (red) installed and are not certified for use in any installation

Wiring Connections and Power Up

Summary
The transmitter is designed to operate in a two-wire power/current loop with loop resistance and power supply voltage within the operating range shown in **Figure 10.**

Loop wiring is connected to the transmitter by simply attaching the positive (+) and negative (–) loop wires to the positive (+) and negative (–) SIGNAL screw terminals on the terminal block in the transmitter's electronics housing shown in **Figure 11**.
Each transmitter includes an internal terminal to connect it to earth ground. Also, a ground terminal can be optionally added to the outside of the electronics housing. While it is not necessary to ground the transmitter for proper operation, doing so tends to minimize the possible effects of noise on the output signal and affords protection against lightning and static discharge.

An optional lightning terminal block can be installed in place of the non-lightning terminal block for Transmitters that will be installed in an area that is highly susceptible to lightning strikes.

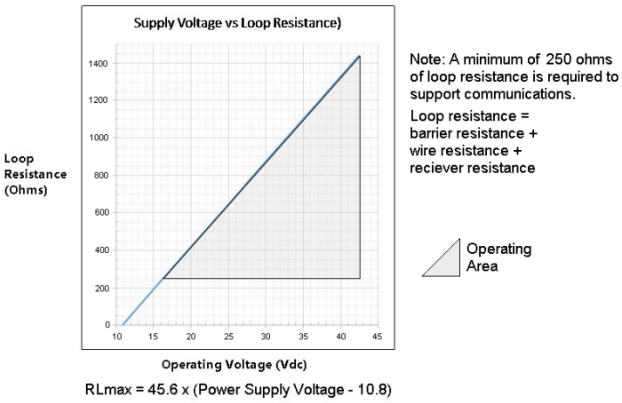

RLmax = 45.6 x (Power Supply Voltage - 10.8)

Figure 10: Two-wire power/current loop

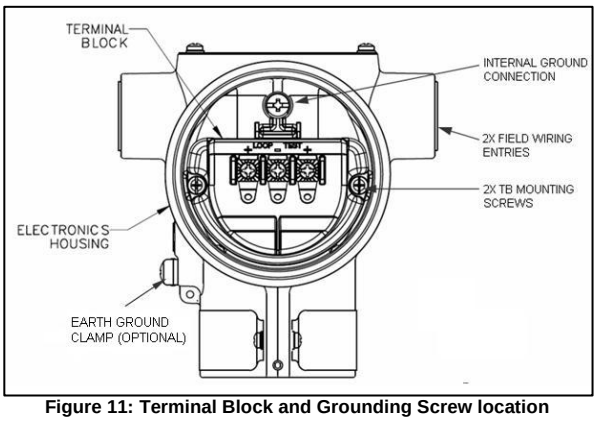

Figure 11: Terminal Block and Grounding Screw location

Note: The right hand terminal is for loop test and is not applicable for the Fieldbus option.

Wiring Variations

The above procedures are used to connect power to a Transmitter. For loop wiring and external wiring, detailed drawings are provided for Transmitter installation in non-intrinsically safe areas and for intrinsically safe loops in hazardous area locations. This procedure shows the steps for connecting power to the transmitter.

Wiring must comply with local codes, regulations and ordinances. Grounding may be required to meet various approval body certification, for example CE conformity. Refer to the *SmartLine Transmitter User's Manual*, Documents # 34-ST-25-35 (ST 800) or 34-ST-25-44 (ST 700) for details.

Explosion-Proof Conduit Seal

When installed as explosion proof in a Division 1 Hazardous Location, keep covers tight while the Transmitter is energized. Disconnect power to the Transmitter in the non-hazardous area prior to removing end caps for service.

When installed as non-incendive equipment in a Division 2 hazardous location, disconnect power to the Transmitter in the non-hazardous area, or determine that the location is non-hazardous before disconnecting or connecting the Transmitter wires.

Transmitters installed in for protection explosion proof in Class I, Division 1 do not need an explosion proof seal in accordance with ANSI/NFPA 70, the US National Electrical Code. A LISTED explosion proof seal to be installed in the conduit, within 18 inches (457.2mm) of the Transmitter when 3/4" conduit is used.
Crouse-Hinds type EYS/EYD or EYSX/EYDX are examples of LISTED explosion proof seals that meet this requirement. Transmitters installed as explosion proof in Class I, Division 1, Group B, C or D hazardous (classified) locations do not require that explosion proof seal be installed in the conduit.

Step	Action
1	See Figure 11, above, for parts locations.
2	Remove the end cap cover from the terminal block end of the Electronics Housing
3	Feed loop power leads through one end of the conduit entrances on either side of the Electronics Housing. The Transmitter accepts up to 16 AWG wire.
4	Plug the unused conduit entrance as specified in Table 1.
5	Connect the positive loop power lead to the positive (+) terminal and the negative loop power lead to the negative (-) terminal. Note that the Transmitter is not polarity-sensitive.
6	Replace the end cap, and secure it in place using a 1.5mm hex wrench.

Trim the Transmitter

Procedure to Trim the Transmitter
For a transmitter with a small differential pressure span, you must ensure that the transmitter is vertical when mounting it. You do this by leveling the transmitter side-to-side and front-to-back. See **Figure 5** for suggestions on how to level the transmitter using a spirit balance. You must also zero the transmitter by following the steps in this table.

Step	Action
1	Attach the transmitter to the mounting bracket but do not completely tighten the mounting bolts
2	Connect a tube between the input connections in the high pressure (HP) and low pressure (LP) heads to eliminate the effects of any surrounding air currents.
3	Connect 24Vdc power to the transmitter. For HART/DE connect a digital voltmeter to monitor the PV output.
4	Use applicable communicator to establish communications with the transmitter. For DE transmitter use SFC, SCT, or MCT. For Hart, use MCT or other Hart Communicator with applicable Honeywell DD's. For Fieldbus, use NI FBUS tools with applicable Honeywell DD's.
5	While reading the transmitter's output on a communication tool or a voltmeter, position the transmitter so the output reading is at or near zero, and then completely tighten the mounting bolts.
6	The Local Display or applicable communicator can be used to perform the Zero Corrects. This corrects the transmitter for any minor error that may occur after the mounting bolts are tightened.
7	Remove the tube from between the input connections, the power, and the digital voltmeter or communication tool.

Set the Jumpers For HART/DE

Setting Failsafe Direction and Write Protect Jumpers

The SmartLine Pressure Transmitter (DE or HART) provides two jumpers to set the desired failsafe action and Write Protect option. See

The top jumper on the electronics module sets the Failsafe direction. The default setting is up-scale failsafe.

Up Scale drives the loop to a value greater than 21mA while Down Scale drives the loop to a value less than 3.8mA.

You can change the failsafe direction by moving the Failsafe Jumper (top jumper) to the desired position (UP or DOWN).

If your transmitter is operating in DE mode, the upscale failsafe action will cause the transmitter to generate a "+ infinity" digital signal, while a downscale failsafe will cause the transmitter to generate a "– infinity" digital signal.

The bottom jumper sets the Write Protect. The default setting is OFF (Unprotected).

When set to the ON (Protected) position, Changed configuration parameters cannot be written to the transmitter.

When set to the OFF (Unprotected) position, Changed configuration parameters can be written to the transmitter.

	***ATTENTION**: Electrostatic Discharge (ESD) hazards. Observe precautions for handling electrostatic sensitive devices*
Step	***Action***
1	Turn OFF Transmitter power.
2	Loosen the end-cap lock, and unscrew the end cap from the Electronics side of the Transmitter housing.
3	If applicable, carefully depress the tabs on the sides of the Display Module and pull it off. If necessary, move the interface connector from the Communication Module to the display module to provide the preferred orientation of the display module in the window.
4	Set the Failsafe Jumper (top jumper) to the desired action (UP or DOWN). And the Write Protect jumper (Bottom jumper) to the desired behavior (Protected or Unprotected) See Table for jumper positioning.
5	Screw on the end cap and tighten the end-cap lock.
6	Turn ON Transmitter power.

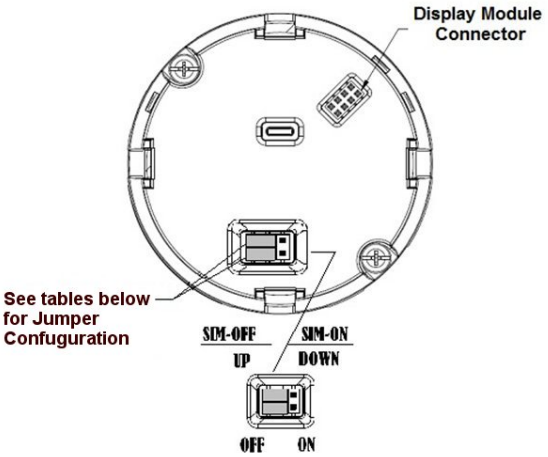

Figure 12: Jumper Location HART/DE

Table 3 - Jumper Settings

Jumper Settings	Description
	Failsafe = UP (High) *Write Protect = OFF (Not Protected)*
	Failsafe = DOWN (Low) *Write Protect = OFF (Not Protected)*
	Failsafe = UP (High) *Write Protect = ON (Protected)*
	Failsafe = DOWN (Low) *Write Protect = ON (Protected)*

Write Protect Jumper on Foundation Fieldbus (FF)

On Foundation Fieldbus transmitters there is no Failsafe jumper selection but there is a Write Protect jumper.

The bottom jumper sets the Write Protect. The default setting is OFF (Unprotected).

When set to the ON (Protected) position, changes to configuration parameters cannot be written to the transmitter.

When set to the OFF (Unprotected) position, changes to configuration parameters can be written to the transmitter.

	ATTENTION: Electrostatic Discharge (ESD) hazards. Observe precautions for handling electrostatic sensitive devices.
	WARNING! PERSONAL INJURY: Risk of electrical shock. Disconnect power before proceeding. HAZARDOUS LIVE voltages greater than 30Vrms, 42.4 V peak, or 60VDC may be accessible. Failure to comply with these instructions could result in death or
Step	**Action**
1	*Turn OFF Transmitter power.*
2	*Loosen the end-cap lock, and unscrew the end cap from the Electronics side of the Transmitter housing.*
3	*If applicable, carefully depress the tabs on the sides of the Display Module and pull it off.*
4	*Set the Write Protect jumper (Bottom jumper) to the desired behavior (Protected or Unprotected). See* Table *4 for jumper positioning.*
5	*Screw on the end cap and tighten the end-cap lock.*
6	*Turn ON Transmitter power.*

Table 4 - Fieldbus Write Protect

Image	*Description*
	Fieldbus SIM Mode = OFF *Write Protect = OFF (Not Protected)*
	Fieldbus SIM Mode = OFF *Write Protect = ON (Protected)*
	Fieldbus SIM Mode = ON *Write Protect = OFF (Not Protected)*

Configuration Guide

This transmitter comes with a standard factory configuration. Consult the nameplate for basic information.
Reconfiguration for your particular application can be accomplished by following instructions in the Transmitter User's manual.
This can be found by following the website URL or QR code on page 1 of this document.

PRODUCT CERTIFICATIONS

A1. Safety Instrumented Systems (SIS) Installations

For Safety Certified Installations, please refer to ST 800 & ST 700 Safety Manual 34-ST-25-37 for installation procedure and system requirements.

A2. European Directive Information (CE Mark)

CE Honeywell

50080030
Revision: S

EU DECLARATION OF CONFORMITY

We,
Honeywell International Inc.
Honeywell Field Solutions
512 Virginia Drive
Fort Washington, PA 19034 USA

declare under our sole responsibility that the following products,

ST 800 – Smart Series Pressure Transmitter
And
ST 700- Smart Series Pressure Transmitter

to which this declaration relates, is in conformity with the provisions of the European Community Directives, including the latest amendments, as shown in the attached schedule.

Assumption of conformity is based on the application of the harmonized standards and when applicable or required, a European Community notified body certification, as shown in the attached schedule.

The authorized signatory to this declaration, on behalf of the manufacturer, and the Responsible Person is identified below.

Owen J. Murphy
Product Safety & Approvals Engineering
Issue Date: 17 July 2018
Fort Washington, PA 19034, USA

Honeywell

SCHEDULE
50080030
Revision: S

EMC Directive (2014/30/EU)

EN 61326-1:2013	Electrical Equipment for Measurement, Control and Laboratory Use – EMC Requirements.
IEC 61326-3-1:2008	Electrical Equipment for Measurement, Control and Laboratory Use- Part 3-1: Immunity Requirements for safety related systems and equipment intended to perform safety-related functions.

Summary of Tests Performed:

PORT	TEST	STANDARD	CRITERIA (IEC 61326-1)	CRITERIA (IEC 61326-3-1)	RESULTS
Enclosure	Radiated Emission	CISPR 11	Group1, Class A 30 – 230 MHz: 40 dB 230 – 1000 MHz: 47 dB	Group1, Class A 30 – 230 MHz: 40 dB 230 – 1000 MHz: 47 dB	PASS
	ESD Immunity	IEC61000-4-2	+/- 4KV Contact +/- 8KV Air	+/- 6KV Contact +/- 8KV Air	PASS
	EM Field- RF Radiated Susceptibility	IEC61000-4-3	10 V/m- 80 MHz to 1GHz 3 V/m - 1.4 GHz to 2.0 GHz 1 V/m- 2.0 GHz to 2.7 GHz	20 V/m- 80MHz to 1GHz 10 V/m - 1.4GHz to 2.0 GHz 3 V/m- 2.0GHz to 2.7GHz	PASS PASS PASS
	50Hz/60Hz Magnetic Field Immunity	IEC 6100-4-8	30 A/m	30 A/m	N/A 1
DC Power	EFT(B) Immunity	IEC61000-4-4	+/- 1KV	+/- 2KV	PASS
	Surge Immunity	IEC61000-4-5	+/- 1KV	+/- 2KV	PASS
	RF Conducted Susceptibility	IEC61000-4-6	3V	3 V Except the following: 10 V 3.39 to 3.410MHz 10 V 6.765 to 6.795MHz 10 V 13.553 to 13.567MHz 10 V 26.957 to 27.283MHz 10 V 40.66 to 40.70MHz	PASS
I/O Signal/ Control (Including Earth Lines)	EFT(Burst) Immunity	IEC61000-4-4	+/- 1KV	+/- 2KV	2
	Surge Immunity	IEC61000-4-5	+/- 1KV	+/- 2KV	2
	RF Conducted Susceptibility	IEC61000-4-6	3V	3 V Except the following: 10 V 3.39 to 3.410MHz	2

2 of 6

Honeywell

SCHEDULE
50080030
Revision: S

PORT	TEST	STANDARD	CRITERIA (IEC 61326-1)	CRITERIA (IEC 61326-3-1)	RESULTS
				10 V 6.765 to 6.795MHz 10 V 13.553 to 13.567MHz 10 V 26.957 to 27.283MHz 10 V 40.66 to 40.70MHz	
AC Power	Voltage Dip	IEC61000-4-11	0% during 1 Cycle 40% during 10-12 Cycles 70% during 25-30 Cycles		N/A[3]
	Short Interruptions	IEC61000-4-11	0% during 250-300 Cycles		N/A[3]
	EFT(Burst) Immunity	IEC61000-4-4	2KV		N/A[3]
	Surge Immunity	IEC61000-4-5	1KV/ 2KV		N/A[3]
	RF Conducted Susceptibility	IEC61000-4-6	3V		N/A[3]

1. There is no magnetic sensitive circuitry.
2. Done as part of the DC Power Testing.
3. Product is DC Powered.

3 of 6

Honeywell

SCHEDULE
50080030
Revision: S

ATEX Directive (2014/34/EU)

EU-Type Examination Certificate No: Sira12ATEX2233X Protection : Intrinsically Safe, Flameproof and Dust

Equipment Group II Category 1 G
Ex ia IIC T4 Ga
Ex ic IIC T4 Gc
FISCO Field Device
Ta= -50°C TO +70°C

Equipment Group II Category 1/ 2 G and Group II Category 2 D
Ex db IIC T6..T4 Ga/Gb
Ta: -50°C to +65°C for T6
Ta: -50°C to +85°C for T5...T4

Ex tb IIIC T95°C T120°C Db
Ta: -50°C to +65°C for T110°C...T120°C
Ta: -50°C to +85°C for T95°C...T110°C

Standards:
EN 60079-0: 2012+A11 : 2013 EN 60079-1: 2014 EN 60079-11: 2012
EN 60079-26: 2015 EN 60079-31: 2009

Type Examination Certificate No: Sira12ATEX4234X Protection : Increase Safety, Intrinsic Safety Category 3

Equipment Group II Category 3 G
Ex ec IIC T4 Gc
Ta= -50°C TO +85°C

Ex ic IIC T4 Gc
Ex ic IIC T4 Gc
FISCO Field Device
Ta= -50°C TO +85°C

Standards:
EN 60079-0: 2012+A11 : 2013 EN 60079-11: 2012 EN 60079-7: 2015

ATEX Notified Body for EC Type Certificates
Sira Certifcation Service [Notified Body Number: 0518]
Unit 6, Hawarden Industrial Park,
Hawarden, CH5 3US
United Kingdom

ATEX Notified Body for Quality Assurance
DEKRA Certification B.V. [Notified Body Number: 0344]
Meander 1051
6825 MJ Arnhem
The Netherlands

4 of 6

Honeywell

SCHEDULE
50080030
Revision: S

Pressure Equipment Directive (PED) (2014/68/EU)
ASME Boiler and Pressure Vessel Code Section VIII 'Rules for Construction of Pressure Vessels: 2000

Pressure Transmitter	PED Module
Absolute Pressure	
STA822/ STA722/ STA725	Sound Engineering Practice (SEP)
STA 821/ STA721/ STA723	
STA 840/ STA740/ STA745	
STA 841/ STA741/ STA745	
STA871/ STA771/ STA775	Module A
Differential Pressure	
STD 810	Module A
STD820/ STD720/ STD725	
STD825	
STD830/ STD730/ STD735	
STD870/ STD770/ STD775	
Gauge Pressure	
STG830/ STG730/ STG735	Sound Engineering Practice (SEP)
STG840/ STG740/ STG745	
STG831/ STG731/ STG735	
STG841/ STG741/ STG745	
STG870/ STG770/ STG775	Module A
STG871/ STG771/ STG775	
STG881/ STG781/ STG785	
STG891/ STG791/ STG795	
Flange Mounted	
STF828/ STF728/ STF725	Sound Engineering Practice (SEP)
STF832/ STF732/ STF735	
STF82F/ STF72F/ STF72P	
STF83F/ STF73F/ STF72P	
Remote Diaphragm	
STR82D/ STR73D/ STR735D	Sound Engineering Practice (SEP)
STR83D	
STR84G/ STR74G/ STR745G	
STR87G	
STR84A	

5 of 6

Honeywell

SCHEDULE
50080030
Revision: S

Measuring Instruments Directive (MID) (2014/32/EU)
NMI Evaluation Certificate: TC8395

Liquid Applications

Model	Range
STA 84L	1 Bar to 35 Bara
STA87L	1 Bar to 100 Bara
STG 84L	1 Bar to 35 Barg
STG87L	1 Bar to 100 Barg
STD 820	0 Bar to 1Barg
STD830	0 Bar to 7 Barg
STD870	0 Bar to 100 Barg

Gas Applications

Model	Range
STA 84L	0.9 Bara to 6 Bara
	1.75 Bara to 35 Bara
STA87L	20 Bara to 100 Bara
STG 84L	1.75 Barg to 35 Barg
STG87L	5 Barg to 100 Barg
STD 820	0 Bar to 1Bar
STD830	1.5 Bar to 7 Bar
STD870	0 Bar to 100 Bar

WELMEC Guide 8.8 OIML R117-1: 2007(E) EN 12405-1:2005+A2: 2010

MID Notified Body for Parts Certificates
NMi Certin B.V.
Hugo de Grootplein 1
3300 AJ Dordrecht
The Netherlands

6 of 6

Hazardous Locations Certifications

AGENCY	TYPE OF PROTECTION	COMM. OPTION	FIELD PARA-METERS	AMBIENT TEMP (Ta)
FM Approvals™ USA	**Explosionproof:** Class I, Division 1, Groups A, B, C, D; **Dust Ignition Proof:** Class II, III, Division 1, Groups E, F, G; T6..T5 Class I, Zone 0/1, AEx db IIC T6..T5 Ga/Gb Class II, Zone 21, AEx tb IIIC T95° Db	All	Note 1	T5: -50 °C to 85°C T6: -50 °C to 65°C
	Intrinsically Safe: Class I, II, III, Division 1, Groups A, B, C, D, E, F, G: T4 Class I, Zone 0, AEx ia IIC T4 Ga FISCO Field Device (Only for FF Option) Ex ia IIC T4 Ga; Ex ic IIC T4 Gc	4-20 mA / DE/ HART	Note 2a	-50 °C to 70°C
		Foundation Fieldbus	Note 2b	-50 °C to 70°C
	Nonincendive: Class I, Division 2, Groups A, B, C, D locations, T4 Class I, Zone 2, AEx nA IIC T4 Gc	4-20 mA / DE/ HART/ Foundation Fieldbus	Note 1	-50 °C to 85°C
	Enclosure: Type 4X/ IP66/ IP67	All	All	-
Canadian Standards Association (CSA) USA and Canada	**Explosion Proof:** Class I, Division 1, Groups A, B, C, D; **Dust Ignition Proof:** Class II, III, Division 1, Groups E, F, G; T6..T5 Class I Zone 1 AEx db IIC T6..T5 Ga/Gb Ex db IIC T6..T5 Ga/Gb Zone 22 AEx tb IIIC T95° Db Ex tb IIIC T95° Db	All	Note 1	T5: -50 °C to 85°C T6: -50 °C to 65°C
	Intrinsically Safe: Class I, II, III, Division 1, Groups A, B, C, D, E, F, G; T4 Class I Zone 0 AEx ia IIC T4 Ga Ex ia IIC T4 Ga FISCO Field Device (Only for FF Option) Ex ia IIC T4 Ga; Ex ic IIC T4 Gc	4-20 mA / DE/ HART	Note 2a	-50 °C to 70°C
		Foundation Fieldbus	Note 2b	-50 °C to 70°C
	Nonincendive: Class I, Division 2, Groups A, B, C, D; T4 Class I Zone 0 AEx nA IIC T4 Gc Ex nA IIC T4 Gc	4-20 mA / DE/ HART/ Foundation Fieldbus	Note 1	-50 °C to 85°C
	Enclosure: Type 4X/ IP66/ IP67	All	All	-
ATEX	**Flameproof:** II 1/2 G Ex db IIC T6..T5 Ga/Gb II 2 D Ex tb IIIC T95° Db	All	Note 1	T5: -50 °C to 85°C T6: -50 °C to 65°C
	Intrinsically Safe: II 1 G Ex ia IIC T4 Ga FISCO Field Device (Only for FF Option) Ex ia IIC T4 Ga; Ex ic IIC T4 Gc	4-20 mA / DE/ HART	Note 2a	-50 °C to 70°C
		Foundation Fieldbus	Note 2b	-50 °C to 70°C
	Nonincendive: II 3 G Ex nA IIC T4 Gc	4-20 mA / DE/ HART/ Foundation Fieldbus	Note 1	-50 °C to 85°C
	Enclosure: IP66/ IP67	All	All	-
IECEx World	**Flameproof :** Ex db IIC T6..T5 Ga/Gb Ex tb IIIC Db T 95°C Db	All	Note 1	T5: -50 °C to 85°C T6: -50 °C to 65°C
	Intrinsically Safe: Ex ia IIC T4 Ga FISCO Field Device (Only for FF Option) Ex ia IIC T4 Ga; Ex ic IIC T4 Gc	4-20 mA / DE/ HART	Note 2a	-50 °C to 70°C
		Foundation Fieldbus	Note 2b	-50 °C to 70°C
	Nonincendive: Ex nA IIC T4 Gc	4-20 mA / DE/ HART/ Foundation Fieldbus	Note 1	-50 °C to 85°C
	Enclosure: IP66/ IP67	All	All	-
SAEx South Africa	**Flameproof :** Ex d IIC Ga/Gb T4 Ex tb IIIC Db T 95°C	All	Note 1	-50 °C to 85°C
	Intrinsically Safe: Ex ia IIC Ga T4 FISCO Field Device (Only for FF Option) Ex ia IIC T4 Ga; Ex ic IIC T4 Gc	4-20 mA / DE/ HART	Note 2a	-50 °C to 70°C
		Foundation Fieldbus	Note 2b	-50 °C to 70°C
	Nonincendive: Ex nA IIC Gc T4	4-20 mA / DE/ HART/ Foundation Fieldbus	Note 1	-50 °C to 85°C
	Enclosure: IP66/ IP67	All	All	-

INMETRO Brazil	**Flameproof:** Ex db IIC T6..T5 Ga/Gb Ex tb IIIC T 95°C Db	All	Note 1	50 °C to 85°C
	Intrinsically Safe: Ex ia IIC T4 Ga	4-20 mA / DE/ HART	Note 2a	50 °C to 70°C
	FISCO Field Device (Only for FF Option) Ex ia IIC T4 Ga; Ex ic IIC T4 Gc	Foundation Fieldbus	Note 2b	50 °C to 70°C
	Nonincendive: Ex nA IIC T4 Gc	4-20 mA / DE/ HART/ Foundation Fieldbus	Note 1	-50 °C to 85°C
	Enclosure : IP 66/67	All	All	-
NEPSI China	**Flameproof:** Ex d IIC Ga/Gb T4 Ex tb IIIC Db T 85°C	All	Note 1	-50 °C to 85°C
	Intrinsically Safe: Ex ia IIC Ga T4	4-20 mA / DE/ HART	Note 2a	-50 °C to 70°C
	FISCO Field Device (Only for FF Option) Ex ia IIC T4	Foundation Fieldbus	Note 2b	-50 °C to 70°C
	Nonincendive: Ex nA IIC Gc T4	4-20 mA / DE/ HART/ Foundation Fieldbus	Note 1	-50 °C to 85°C
	Enclosure : IP 66/67	All	All	-

EAC Russia, Belarus and Kazakhstan	**Flameproof:** 1 Ex d IIC Ga/Gb T4 Ex tb IIIC Db T 85°C	All	Note 1	-50 °C to 85°C
	Intrinsically Safe: 0 Ex ia IIC Ga T4	4-20 mA / DE/ HART	Note 2a	-50 °C to 70°C
	FISCO Field Device (Only for FF Option) Ex ia IIC T4	Foundation Fieldbus	Note 2b	-50 °C to 70°C
	Enclosure : IP 66/67	All	All	
KOSHA Korea	**Flameproof :** Ex d IIC T6..T5 Ex tD T 95°C	All	Note 1	T6: Ta= -50 °C to 65°C T5: Ta= -50 °C to 85°C
	Intrinsically Safe: Ex ia IIC T4	4-20 mA / DE/ HART	Note 2a	Ta= -50 °C to 70°C
		Foundation Fieldbus	Note 2b & 2c	Ta= -50 °C to 70°C
	Enclosure: IP66/ IP67	All	All	-

Notes

1. **Operating Parameters:**

Voltage= 11 to 42 V	Current= 4-20 mA Normal (3.8 – 23 mA Faults)

2. **Intrinsically Safe Entity Parameters**

   For details see Control Drawing below.

3. **Marking ATEX Directive**
   General:
   The following information is provided as part of the labeling of the transmitter:
   - Name and Address of the manufacturer
   - Notified Body identification: DEKRA Quality B.V., Arnhem, the Netherlands
   - For complete model number, see the Model Selection Guide for the particular model of pressure transmitter.
   - The serial number of the transmitter is located on the Meter Body data-plate. The first two digits of the serial number identify the year (02) and the second two digits identify the week of the year (23); for example, 0223xxxxxxxx indicates that the product was manufactured in 2002, in the 23rd week

Notes

3., *continued*

Apparatus Marked with Multiple Types of Protection

The user must determine the type of protection required for installation the equipment. The user shall then check the box [ ] adjacent to the type of protection used on the equipment certification nameplate. Once a type of protection has been checked on the nameplate, the equipment shall not then be reinstalled using any of the other certification types.

4. WARNINGS and Cautions:

Intrinsically Safe and Non-Incendive Equipment:
WARNING: SUBSTITUTION OF COMPONENTS MAY IMPAIR SUITABILITY FOR USE IN HAZARDOUS LOCATIONS.
Explosion-Proof/ Flameproof:
WARNING: DO NOT OPEN WHEN AN EXPLOSIVE ATMOSPHERE MAY BE PRESENT
Non-Incendive Equipment:
WARNING: DO NOT OPEN WHEN AN EXPLOSIVE ATMOSPHERE MAYBE PRESENT
WARNING: FOR CONNECTION IN AMBIENTS ABOVE 60°C USE WIRE RATED 105oC

5. Conditions of Use for Ex Equipment, "Hazardous Location Equipment" or "Schedule of Limitations":

Painted surface of the ST700/ST800 may store electrostatic charge and become a source of ignition in applications with a low relative humidity less than approximately30% relative humidity where the painted surface is relatively free of surface contamination such as dirt, dust or oil. Cleaning of the painted surface should only be done with a damp cloth.

Flame-proof Installations: The transmitter can installed in the boundary wall between an area of EPL Ga/ Class I Zone 0/ Category 1 and the less hazardous area, EPL Gb/ Class I Zone 1/ Category 2. In this configuration, the process connection is installed in EPL Ga/ Class I Zone 0/ Category 1, while the transmitter housing is located in EPL Gb/ Class I Zone 1/ Category 2.

The applicable temperature class, ambient temperature range and maximum process temperature of the equipment is as follows;

5. Continued

PROCESS TEMPERATURE VS AMBIENT TEMPERATURE

	Maximum Process Temperature		
Temperature Class	T6	T5	T4
Ambient Temperature			
-50°C TO +65 °C	80 °C	----	120 °C
-50°C TO +70 °C	-----	----	120 °C
-50°C TO +85 °C	-----	95 °C	110 °C

Consult the manufacturer for dimensional information on the flameproof joints for repair.
The transmitter can be installed in the boundary wall between an area of Category 1 and the less hazardous area, Category 2. In this configuration, the process connection is installed in Category 1 while the transmitter housing is installed in Category 2.

Intrinsically Safe: Must be installed per drawing 50049892

Division 2: This equipment is suitable for use in a Class I, Division 2, Groups A, B, C, D; T4 or Non-Hazardous Locations Only.

The enclosure is manufactured from low copper aluminum alloy. In rare cases, ignition sources due to impact and friction sparks could occur. This shall be considered during Installation, particularly if equipment is installed a Zone 0 location.
If a charge-generating mechanism is present, the exposed metallic part on the enclosure is capable of storing a level of electrostatic that could become incendive for IIC gases. Therefore, the user/ installer shall implement precautions to prevent the buildup of electrostatic charge, e.g. earthing the metallic part. This is particularly important if equipment is installed a Zone 0 location.

Marine Certificates	This certificate defines the certifications covered for the ST 800 Pressure Transmitter family of products, it represents the compilation of the five certificates Honeywell currently has covering the certification of these products into marine applications.
	American Bureau of Shipping (ABS) - 2009 Steel Vessel Rules 1-1-4/3.7, 4-6-2/5.15, 4-8-3/13 & 13.5, 4-8-4/27.5.1, 4-9-7/13. Certificate number: 04-HS417416-PDA
	Bureau Veritas (BV) - Product Code: 389:1H. Certificate number: 12660/B0 BV
	Det Norske Veritas (DNV) - Location Classes: Temperature D, Humidity B, Vibration A, EMC B, Enclosure C. For salt spray exposure; enclosure of 316 SST or 2-part epoxy protection with 316 SST bolts to be applied. Certificate number: A-11476
	Korean Register of Shipping (KR) - Certificate number: LOX17743-AE001
	Lloyd's Register (LR) - Certificate number: 02/60001(E1) & (E2)
SIL 2/3 Certification	IEC 61508 SIL 2 for non-redundant use and SIL 3 for redundant use according to EXIDA and TÜV Nord Sys Tec GmbH & Co. KG under the following standards: IEC61508-1: 2010; IEC 61508-2: 2010; IEC61508-3: 2010.
MEASUREMENT INTRUMENTS DIRECTIVE (MID) 2004/ 22/ EC **ST800 only**	**Certificate Issued by** NMI Certin B.V. **Mechanical Class:** M3 **Electromagnetic Environment:** E3 **Ambient Temperature Range:** -25 °C to + 55 °C

Unit	Custom Calibration
STA84L	0 to 35 Bar A
STG84L	0 to 35 Bar
STA87L	0 to 100 Bar A
STG87L	0 to 100 Bar

Control Drawing

PRE REL		
ISS	REVISION & DATE	APPD
G	06/20/2016 ECN 2016-3397	DGG

ST 800/ ST 700 Series Pressure, ANALOG, HART/DE and FF/ PA Communications

1. Intrinsically safe installation shall be in accordance with
   a. FM (USA): ANSI/NFPA 70, NEC® Articles 504 and 505.
   b. CSA (Canada): Canadian Electrical Code (CEC), part I, section 18.
   c. ATEX: Requirements of EN 60079-14, 12.3 (See also 5.2.4).
   d. IECEx: Requirements of IEC 60079-14, 12.3 (See also 5.2.4).
2. ENTITY approved equipment shall be installed in accordance with the manufacturer's Intrinsic Safety Control Drawing.
3. The Intrinsic Safety ENTITY concept allows the interconnection of two ENTITY Approved Intrinsically safe devices with ENTITY parameters not specifically examined in combination as a system when:
   Uo, Voc, or Vt ≤ Ui or Vmax; Io, Isc, or It ≤ Ii or Imax; Ca or Co ≥ Ci + Ccable, La or Lo ≥ Li + Lcable, Po ≤ Pi.
   Where two separate barrier channels are required, one dual-channel or two single-channel barriers may be used, where in either case, both channels have been Certified for use together with combined entity parameters that meet the above equations.
4. System Entity Parameters:
   ST 800/ ST 700 Transmitter: Vmax Voc or Uo, Imax Isc or Io;
   ST 800/ ST 700 Transmitter: Ci + Ccable ≤ Control Apparatus Ca,
   ST 800/ ST 700 Transmitter: Li + Lcable ≤ Control Apparatus La.
5. When the electrical parameters of the cable are unknown, the following values may be used:
   Capacitance: 197pF/m (60 pF/ft)
   Inductance: 0.66μH/m (0.020μH/ft).
6. Control equipment that is connected to Associated Equipment must not use or generate more than 250 V.
7. Associated equipment must be FM, CSA ATEX or IECEx (depending on location) listed. Associated equipment may be installed in a Class I, Division 2 or Zone 2 Hazardous (Classified) location if so approved.
8. Non-Galvanically isolated equipment (grounded Zener Barriers) must be connected to a suitable ground electrode per:
   a. FM (USA): NFPA 70, Article 504 and 505. The resistance of the ground path must be less than 1.0 ohm.
   b. CSA (Canada): Canadian Electrical Code (CEC), part I, section 10.
   c. ATEX: Requirements of EN 60079-14, 12.2.4.
   d. IECEx: Requirements of IEC 60079-14, 12.2.4.
9. Intrinsically Safe DIVISION 1/ Zone 0 WARNING: SUBSTITUTION OF COMPONENTS MAY IMPAIR SUITABILITY FOR USE IN HAZARDOUS LOCATIONS.
10. Division 2/ Zone 2: WARNING: DO NOT OPEN WHEN AN EXPLOSIVE GAS ATMOSPHERE IS PRESENT.
11. NO REVISION OF THIS CONTROL DRAWING IS PERMITTED WITHOUT AUTHORIZATION FROM THE AGENCIES listed.
12. For release approvals see ECO # 0094464.

DRAWN	KP	1/9/2015	Honeywell
CHECKED			CONTROL DRAWING ST 800/ ST 700 SERIES PRESSURE TRANSMITTER DIVISIONS 1 & 2 / ZONE 0 & 2
DEV ENG			
MFG ENG			
QA ENG			
TOLERANCE UNLESS NOTED			A/A4 — 50049892
MASTER FILE TYPE: MS WORD	ANGULAR DIMENSION		SCALE: None — USED ON — SH. 1 OF 5

Output Protocol: H=HART or D=DE

All Models of ST800 and the following Models of the ST700: STA722, STA740, STA72L, STA74L, STA77L, STD720, STD730, STD770, STG730, STG740, STG770, STG73L, STG74L, STG77L, STG78L, STG79L, STF724, STF732, STF72F, STF73F, STR73D, STR74G, STR73D, and STR74G

ENTITY PARAMETERS	Associated Apparatus
Ui or Vmax ≤ 30V	Uo, Voc or Vt ≤ 30V
Ii or Imax ≤ 105 mA	Io (Isc or It) ≤ 105 mA
Pi or Pmax = 0.9W	Po ≤ 0.9 W
Ci= 3.9 nF	Ca or Co ≥ C_{cable} + $C_{ST\ 800/\ ST\ 700}$
Li= 984 μH	La or Lo ≥ L_{cable} + $L_{ST\ 800/\ ST\ 700}$

After 9/27/2013 (TERMINAL MODULE REVISION E OR LATER)

NOTE: THE REVISION IS ON THE LABEL THAT IS ON THE MODULE. THERE WILL BE TWO LINES OF TEXT ON THE LABEL:
- FIRST IS THE MODULE PART #: 50049839-001 OR 50049839-002
- SECOND LINE HAS THE SUPPLIER INFORMATION, ALONG WITH THE REVISION: XXXXXXX-EXXXX, THE "X" IS RELATED, THE POSITION OF THE "E" IS THE REVISION.

PRODUCTION

Additionally for the ST700 Models: STA725, STA745, STA72S, STA74S, STA77S, STD725, STD735, STD775, STG735, STG745, STG775, STG73S, STG74S, STG77S, STG78S, STG79S, STF725, STF735, STF72P, STF73P, STR735D, and STR745G

ENTITY PARAMETERS (Divisions and Zones Ex ia and Ex ic)	Associated Apparatus
Ui or Vmax ≤ 30V	Uo, Voc or Vt ≤ 30V
Ii or Imax ≤ 225 mA	Io (Isc or It) ≤ 225 mA
Pi or Pmax = 0.9W	Po ≤ 0.9 W
Ci= 3.9 nF	Ca or Co ≥ C_{cable} + $C_{ST\ 800/\ ST\ 700}$
Li= 0 μH	La or Lo ≥ L_{cable} + $L_{ST\ 800/\ ST\ 700}$

Honeywell	A/A4	50049892	
	SCALE: None	REV G DATE 06/20/16	SH. 2 of 5

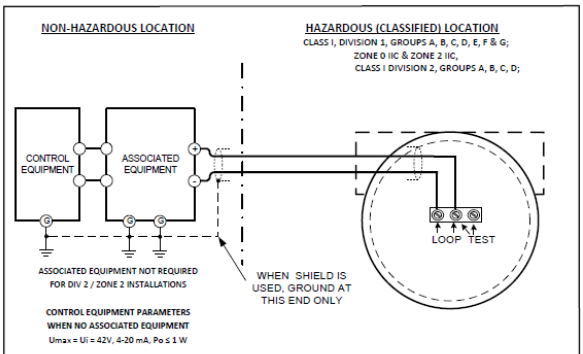

Honeywell	A/A4	50049892	
	SCALE: None	REV G DATE 06/20/16	SH. 3 of 5

Output Protocol: F=Foundation Fieldbus or P= PROFIBUS

All Models of ST800 and the following Models of the ST700: STA722, STA740, STA72L, STA74L, STA77L, STD720, STD730, STD770, STG730, STG740, STG770, STG73L, STG74L, STG77L, STG78L, STG79L, STF724, STF732, STF72F, STF73F, STR73D, STR74G, STR73D, and STR74G

ENTITY PARAMETERS	Associated Apparatus
Ui or Vmax ≤ 30V	Uo, Voc or Vt ≤ 30V
Ii or Imax ≤ 180 mA	Io (Isc or It) ≤ 180 mA
Pi or Pmax = 1W	Po ≤ 1 W
Ci= 0 nF	Ca or Co ≥ C_{cable} + $C_{ST\ 800/\ ST\ 700}$
Li= 984 µH	La or Lo ≥ L_{cable} + $L_{ST\ 800/\ ST\ 700}$

Terminal Module Revision F or Later

NOTE: THE REVISION IS ON THE LABEL THAT IS ON THE MODULE. THERE WILL BE TWO LINES OF TEXT ON THE LABEL:
- FIRST IS THE MODULE PART #: 50049839-003 OR 50049839-004
- SECOND LINE HAS THE SUPPLIER INFORMATION, ALONG WITH THE REVISION: XXXXXXX-FXXXX, THE "X" IS PRODUCTION RELATED; THE POSITION OF THE "F" IS THE REVISION.

ENTITY PARAMETERS	Associated Apparatus
Ui or Vmax ≤ 30V	Uo, Voc or Vt ≤ 30V
Ii or Imax ≤ 225 mA	Io (Isc or It) ≤ 225 mA
Pi or Pmax = 1W	Po ≤ 1 W
Ci= 0 nF	Ca or Co ≥ C_{cable} + $C_{ST\ 800/\ ST\ 700}$
Li= 0 µH	La or Lo ≥ L_{cable} + $L_{ST\ 800/\ ST\ 700}$

NON-HAZARDOUS LOCATION

HAZARDOUS (CLASSIFIED) LOCATION
CLASS I, CLASS II, DIVISION 1, GROUPS A, B, C, D, E, F & G;
ZONE 0 IIC & ZONE 2 IIC,
CLASS I DIVISION 2, GROUPS A, B, C, D;

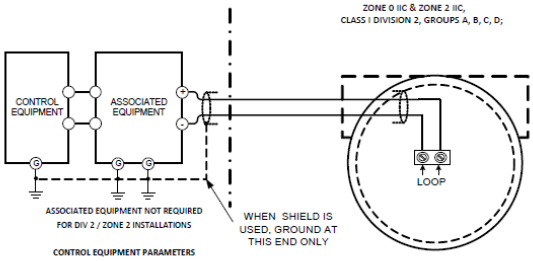

CONTROL EQUIPMENT PARAMETERS WHEN NO ASSOCIATED EQUIPMENT
Umax=Ui= 32V, 25 mA, Po ≤ 1 W

Honeywell	A/A4	50049892	
	SCALE: None	REV G DATE 06/20/16	SH. 4 of 5

Output Protocol: F=Foundation Fieldbus

All Models of ST800 and the following Models of the ST700: STA722, STA740, STA72L, STA74L, STA77L, STD720, STD730, STD770, STG730, STG740, STG770, STG73L, STG74L, STG77L, STG78L, STG79L, STF724, STF732, STF72F, STF73F, STR73D, STR74G, STR73D, and STR74G

FISCO Terminal Module Revision F or Later

NOTE: THE REVISION IS ON THE LABEL THAT IS ON THE MODULE. THERE WILL BE TWO LINES OF TEXT ON THE LABEL:
- FIRST IS THE MODULE PART #: 50049839-003 OR 50049839-004
- SECOND LINE HAS THE SUPPLIER INFORMATION, ALONG WITH THE REVISION: XXXXXXX-FXXXX, THE "X" IS PRODUCTION RELATED, THE POSITION OF THE "F" IS THE REVISION.

ENTITY PARAMETERS (Ex ia and Ex ic)	Associated Apparatus
Ui or Vmax ≤ 18	Uo, Voc or Vt ≤ 18V
Ii or Imax ≤ 380 mA	Io (Isc or It) ≤ 380 mA
Pi or Pmax = 5.32W	Po ≤ 5.32 W
Ci= 0 nF	Ca or Co ≥ C_{cable} + $C_{ST\ 800/\ ST\ 700}$
Li= 0 µH	La or Lo ≥ L_{cable} + $L_{ST\ 800/\ ST\ 700}$

NON-HAZARDOUS LOCATION

HAZARDOUS (CLASSIFIED) LOCATION
ZONE 0 IIC & ZONE 2 IIC,

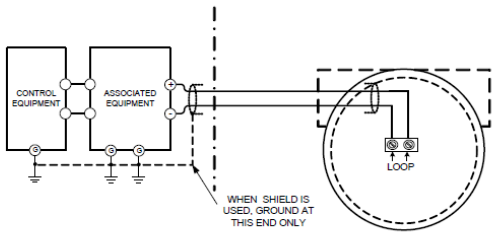

Honeywell	A/A4	50049892	
	SCALE: None	REV G DATE 06/20/16	SH. 5 of 5

WARRANTY/REMEDY

Honeywell warrants goods of its manufacture as being free of defective materials and faulty workmanship. Contact your local sales office for warranty information.
If warranted goods are returned to Honeywell during the period of coverage, Honeywell will repair or replace without charge those items it finds defective. The foregoing is Buyer's sole remedy and is **in lieu of all other warranties, expressed or implied, including those of merchantability and fitness for a particular purpose**. Specifications may change without notice. The information we supply is believed to be accurate and reliable as of this printing. However, we assume no responsibility for its use.

Sales and Service

For application assistance, current specifications, pricing, or name of the nearest Authorized Distributor, contact one of the offices below.

ASIA PACIFIC (TAC) hfs-tac-support@honeywell.com
Australia Honeywell Limited, Phone: +(61) 7-3846 1255, FAX: +(61) 7-3840 6481
Toll Free 1300-36-39-36, Toll Free Fax: 1300-36-04-70
China – PRC – Shanghai, Honeywell China Inc. Phone: (86-21) 5257-4568,
Fax: (86-21) 6237-2826
Singapore, Honeywell Pte Ltd. Phone: +(65) 6580 3278. Fax: +(65) 6445-3033
South Korea, Honeywell Korea Co Ltd. Phone:+(822)799 6114. Fax:+(822) 792 9015

EMEA, Phone: + 80012026455 or +44 (0)1202645583. FAX: +44 (0) 1344 655554
Email: (Sales) sc-cp-apps-salespa62@honeywell.com
or (TAC) hfs-tac-support@honeywell.com

AMERICAS, Honeywell Process Solutions,
Phone: (TAC) 1-800-423-9883 or 215/641-3610. (Sales) 1-800-343-0228.
Email: (Sales) FP-Sales-Apps@Honeywell.com
or (TAC) hfs-tac-support@honeywell.com

While we provide application assistance personally, through our literature and the Honeywell web site, it is up to the customer to determine the suitability of the product in the application.

For more information
To learn more about SmartLine Transmitters, visit www.honeywellprocess.com
Or contact your Honeywell Account Manager

Process Solutions
Honeywell
1250 W Sam Houston Pkwy S
Houston, TX 77042

Honeywell Control Systems Ltd
Honeywell House, Skimped Hill Lane
Bracknell, England, RG12 1EB

Shanghai City Centre, 100 Jungi Road
Shanghai, China 20061

www.honeywellprocess.com

34-ST-25-36, Rev.9
October 2019